AIR, WATER, AND FOOD

FROM A SANITARY STANDPOINT.

BY

ELLEN H. RICHARDS AND ALPHEUS G. WOODMAN,
Instructors in Sanitary Chemistry, Massachusetts Institute of Technology.

"These cannot be taken as sufficient . . . in these times when every word spoken finds at once a ready doubter, if not an opponent. They are, however, specimens, and will serve to make comparisons in time to come."—ANGUS SMITH.

"The ideal scientific mind, therefore, must always be held in a state of balance which the slightest new evidence may change in one direction or another. It is in a constant state of skepticism, knowing full well that nothing is certain."—HENRY A. ROWLAND.

SECOND EDITION, REVISED AND ENLARGED.

FIRST THOUSAND.

NEW YORK:
JOHN WILEY & SONS.
LONDON: CHAPMAN & HALL, LIMITED.
1904.

WORKS OF ELLEN H. RICHARDS

PUBLISHED BY

JOHN WILEY & SONS

43-45 EAST 19TH ST., NEW YORK.

The Cost of Living as Modified by Sanitary Science.
By Ellen H. Richards, Instructor in Sanitary Chemistry in the Massachusetts Institute of Technology. 12mo. 124 pages. Cloth. $1.00.

Air, Water, and Food; From a Sanitary Standpoint.
By Ellen H. Richards, with the assistance of Alpheus G. Woodman, Instructors in Sanitary Chemistry in the Massachusetts Institute of Technology. 8vo. 270 pages. Cloth. $2.00.

The Cost of Food: A Study in Dietaries.
By Ellen H. Richards, Instructor in Sanitary Chemistry in the Massachusetts Institute of Technology. 12mo. 161 pages. Cloth. $1.00.

The Dietary Computer.
By Ellen H. Richards, Instructor in Sanitary Chemistry, Massachusetts Institute of Technology, assisted by Louise Harding Williams. $1.50, net. Pamphlet separately, $1.00 net.

PUBLISHED BY

HOME SCIENCE PUBLISHING CO.,

485 TREMONT STREET, BOSTON, MASS.

The Chemistry of Cooking and Cleaning.
By Ellen H. Richards and S. Maria Elliott. Cloth. 158 pages. Price $1.00.

Food Materials and their Adulterations.
By Ellen H. Richards. Cloth. 183 pages. Price $1.00.

Home Sanitation.
Revised Edition. Edited by Ellen H. Richards and Marion Talbot. Paper. 85 pages. Price 25c

Plain Words about Food.
Edited by Ellen H. Richards. The Rumford Leaflets. Illustrated. Cloth. 176 pages. Price $1.00.

Copyright, 1900, 1904,
BY
ELLEN H. RICHARDS AND ALPHEUS G. WOODMAN.

ROBERT DRUMMOND, PRINTER, NEW YORK.

PREFACE TO THE SECOND EDITION.

THE great increase of attention to the relations of physical environment to mental and moral welfare leads the authors to hope that this revised and enlarged edition will meet with approval by the body of seekers after truth along these lines of study and investigation.

More clearly than any one else they recognize the omissions and shortcomings of any book dealing with so comprehensive a subject under the limitations of a short school course. Therefore a suggestive rather than a complete treatment has been adopted, and a certain conservatism has governed the discussion of some subjects which to treat fully would require too much space as well as a previous training impossible to assume.

The chapters on analytical methods have been considerably enlarged; the character of the matter added tends to make the work more adapted to the needs of the chemical and sanitary engineer as well as to the general student and householder. In a subject so rapidly advancing the printed page can hardly hope to keep fully abreast of the times, but all the methods have been reviewed or modified, and tentative ones have been retained or dropped as experience has indicated their value.

The bibliography has been revised and brought up to date.

CONTENTS.

CHAPTER		PAGE
I.	Three Essentials of Human Existence	1
II.	Air: Composition, Impurities, Relation to Human Life	10
III.	The Problem of Ventilation	19
IV.	Methods of Examination	27
V.	Water: Source, Properties, Solvent Power, as a Carrier.	55
VI.	The Problem of Safe Water and Interpretation of Analyses	74
VII.	Methods of Examination	94
VIII.	Food in Relation to Human Life, Definition, Sources, Classes, Dietaries	139
IX.	Adulteration and Sophistication of Food Materials	154
X.	Methods of Food Analysis	164
	Appendices, Tables, Reagents	221
	Bibliography	247

AIR, WATER, AND FOOD.

CHAPTER I.

THREE ESSENTIALS OF HUMAN EXISTENCE.

AIR, water, and food are three essentials for healthful human life. Sanitary Chemistry deals with these three commodities in their relation to the needs of daily existence: first, as to their normal composition; second, as to natural variations from the normal; third, as to artificial variations—those produced directly by human agency with benevolent intention, or resulting from carelessness or cupidity. A large portion of the problems of public health come under these heads, and a discussion of them in the broadest sense includes a consideration of engineering questions and of municipal finances. This, however, is beyond the scope of the present work.

The following pages will deal chiefly with such portions of the subject of Sanitary Chemistry as come directly under individual control, or which require the education of individuals in order to make up the mass of public opinion which shall support the city or state in carrying out sanitary measures.

A notable interest in the subject of individual health as

a means of securing the highest individual capacity both for work and for pleasure is being aroused as the application of the principles governing the evolutionary progress of other forms of living matter is seen to extend to mankind.

Will power may guide human forces in most economical ways, and may concentrate energy upon a focal point so as to seem to accomplish superhuman feats, but it cannot create force out of nothing. There is a law of conservation of human energy. The human body, in order to carry on all its functions to the best advantage, especially those of the highest thought for the longest time, must be placed under the best conditions and must be supplied with *clean air, safe water,* and *good food,* and must be able to appropriate them to its use. The day is not far distant when a city will be held as responsible for the purity of the air in its schoolhouses, the cleanliness of the water in its reservoirs, and the reliability of the food sold in its markets as it now is for the condition of its streets and bridges. Nor will the years be many before educational institutions will be held as responsible for the condition of the bodies as of the minds of the pupils committed to their care; when a chair of Sanitary Science will be considered as important as a chair of Greek or Mathematics; when the competency of the food-purveyor will have as much weight with intelligent patrons as the scholarly reputation of any member of the Faculty. Within a still shorter time will catalogues call the attention of the interested public to the ventilation of college halls and dormitories, as well as to the exterior appearance and location.

These results can be brought about only when the students themselves appreciate the possibilities of increased mental production under conditions of decreased friction, such as can be found only when the requirements of health are perfectly fulfilled.

Of the three essentials, air may well be considered first, although its office is to convert food already taken into heat and energy. Its exclusion only for a few minutes causes death, and in quantity used it far exceeds the other two. Again, so important is the action of air that the quality of food is of far less consequence when abundant oxygen is present, as in pure air, than when it is present in lessened quantity, as in air vitiated by foreign substances.

Individual habit has much to do with the appreciation of good air, and as our knowledge of the value of an abundance of this substance in securing great efficiency in the human being increases, we shall be led to attach more importance to the sufficiency of the supply.

In northern climates air is not free to all in the sense of costing nothing, for the coming of fresh air into the house means an accompaniment of cold which must be counteracted by the consumption of fuel. A mistaken idea of economy leads householders, school boards, and college trustees to limit the size of the air-ducts as well as of the rooms. It is therefore necessary to emphasize the facts which science has fully established, in order to secure the survival of the fittest of the race under the present pressure of economic conditions, which take so little account of the highest welfare of the human machine.

Air, water, and soil are the common possessions of mankind. It is impossible for man to use either selfishly without injury to his neighbor and without squandering his inheritance. Primitive man could leave a given spot when the soil became offensive, and neighbors were then too few to require consideration; but neither man nor beast could with impunity foul the stream for his neighbor who had rights below him. The soil is permanent; one knows where to look for it and its pollution. Air is abundant and is kept in con-

stant motion by forces of nature beyond human control, so that, save in the neighborhood of an exceptionally offensive factory, man does not often foul the free air of heaven; it is only when he confines it within unwonted bounds that it becomes a menace.

Water is the next precious commodity of the three. Without it man dies in a few days; without it the soil is barren; without it air in motion parches all vegetation and carries clouds of dust-particles; without it there is no life. As population increases it becomes necessary to collect as much of the rainfall as possible, to store it until needed, and to use it with discretion. After use it is often loaded with impurities and sent to deal death and destruction to those who require it later, and yet, in nature's plan, it is the carrier of the world, and rightly treated and carefully husbanded there is enough for the needs of all. Its presence or absence has been the controlling force in determining the habitations of men. In its office of carrier it not only brings nourishment in solution to the tissues of the human body, but also carries away the refuse material. It is a cardinal principle in all sanitary reforms to get rid of that which is useless as soon as possible. Too little water allows accumulation of waste material and a clogging of the bodily drainage system.

The average quantity needed daily by the human body is about three quarts. Of this a greater or less proportion is taken in food, so that at times only from a pint to a quart need be taken in the form of water as such.

Next in importance to quantity is the quality, dependent somewhat upon the uses to which it is to be put. As a rule, the moderately soft waters are the best for any purpose. For drinking purposes water must be free from dangers to health in the way of poisonous metals, decomposing matters, and disease-germs. For domestic use economy requires

that it should not decompose too much soap. Manufacturing interests require that it should not give too much scale to boilers; for agriculture there should not be too much alkali.

From the nature of things, no one family or city can have sole control of a given body of water. Those on the highlands may have the first use of the water, which then percolates to a lower level and is used by the people on the slopes over and over before it reaches the sea to start again on its cycle of vapor, cloud and rain, brook and river. Although receiving impurities each time, there are many beneficent influences at work to overcome the evils resulting from this repeated use. That which is dissolved from one portion of earth may be deposited on another. As the plant is the scavenger of the air, withdrawing the carbon dioxide with which it would otherwise become loaded, so the water has also its plant life, purifying it and withdrawing that which would otherwise soon render it unfit for any use.

Pure water is found only in the chemical laboratory; the most that can be hoped for is that human beings may secure for themselves water which is safe to drink, which will not impair the efficiency of the human machine.

The importance of the third essential for human life, food, and the close interdependence of all three, may be clearly shown. Of little use is it to provide pure air and clean water if the substances eaten are not capable of combining with the oxygen of the air or of being dissolved in the water or the digestive juices; of less use still is it to partake of substances which act as irritants and poisons on the tissues which they should nourish, and thus prevent healthful metabolism and respiratory exchange.

And yet a large majority of those who have acquired some notion of the meaning and importance of pure air and

are beginning to consider it worth while to strive for clean water pay not the least attention to the sanitary qualities of food; the palatable and æsthetic aspects only appeal to them.

Steam-power is produced by the combustion of coal or oil. Human force is derived by releasing the stored energy of the food in the body. The delicately balanced mechanism of the human body suffers even more from friction than the most sensitive machine, and the greatest loss of potential human energy occurs through ignorance, carelessness, and reckless disregard of nature's laws in regard to food.

It is necessary to know, first, what is the normal composition of a given food-material. This is found by analyses of many typical samples. Second, is the sample under consideration normal? To answer this requires an analysis of it, and a comparison of the results with standards. If it is not normal, in what way does it depart from the standard both in healthfulness and in quality? Third, if a food-substance is normal, what are its valuable ingredients and in what proportions are they to be used in the daily diet?

In regard to meat, milk, and fish, the sanitary aspect for the chemist resolves itself into two questions: Is the substance so changed as to become a possible source of poisonous products? Or has anything in the nature of a preservative been added to it? If so, is it of a nature injurious to man?

There is, however, a great range of *quality* in some of the most abundant foodstuffs, such as the cereals, especially in the nitrogen content. This is most important to the vegetarian and to institutions where economy must be practised. The following variations in the composition of leading cereals will illustrate:

	Water.	Nitrogenous Substance.	Crude Fat.	Carbo-hydrates.	Fibre.	Ash.
Oats, maximum.......	20.80	18.84	10.65	64.63	20.08	8.64
" minimum	6.21	6.00	2.11	48.69	4.45	1.34
" American hulled.	12.11	13.57	7.68	63.37	1.30	2.03
Corn, maximum.......	22.20	14.31	8.87	52.08	7.71	3.93
" minimum	4.68	5.55	1.73	72.75	0.99	0.82

One sample of wheat flour may contain 14 per cent. of nitrogenous substance, another may yield only 9. A day's ration, 500 grams, will give 70 grams of gluten, etc., in the one case and only 45 in the other. This difference of 25 grams would be a serious factor in the dietary of an institution where little additional proteid is given, and it alone might be the cause of dangerous under-nutrition.

The next step would naturally be to determine how definitely these varying percentages mean varying nutrition. To this end a study of vegetable nitrogenous products in their combination or contact with cellulose, starch, and mineral matter is needed. Much work remains to be done before these questions can be even approximately answered.

At the low cost of one cent a pound, common vegetables yield only about one-fifth as much nutriment as one cent's worth of flour, yet they contain essential elements and deserve to be carefully studied.

Dried fruits and nuts are much undervalued as articles of food, as are rice and lentils. (See table, page 148.)

The discussion of food values will be found in Chapter VIII.

Probably the widest field for the sanitary chemist to-day is the study of the so-called predigested foods, infant foods, " hygienic " preparations, two-minute cereals, and the countless proprietary packages, which, designed to meet the demand for quick results, prove traps for the unwary.

Therefore the sanitary aspect of food demands a study

of normal food and food value even more than of adulterants or of poisonous food, ptomaines and toxines. The cultivation of intelligent public opinion is most important, and each student should go out from a sanitary laboratory a missionary to his fellow men. That is, the office of a laboratory of sanitary chemistry should be so to diffuse knowledge as to make it impossible for educated people to be deluded by the representations of unprincipled dealers. Freedom from superstition is just as important in this as in the domain of astronomy or physics. So long as chemists are employed by manufacturing concerns in making adulterated and fraudulent foodstuffs, so long must other chemists be employed in protecting the people until the public in general becomes wiser. A part of the common knowledge of the race should be the essentials of healthful living, in order that the full measure of human progress may be enjoyed.

There is needed a greater respect for food and its functions in the human body, a better knowledge of its effect on the daily output of energy, its absolute relations to health and life, and the enjoyment of the same. The familiarity with these facts which is given by a few hours' work in the laboratory will make a lasting impression and will enable the student to benefit his whole life, even if he never uses it professionally. It is purely scientific knowledge, just as much as that derived from a study of the phases of the moon or the formulæ of integration.

The variety of operations in such work, calling for great diversity of apparatus and methods, is an educational factor not to be overlooked in laboratory training.

For all detailed discussions and methods the reader is referred to such works as those of Wiley, Allen, Blythe, etc., but for the student who needs to study, as a part of general *education*, only typical substances, and such methods as can

be carried out within the limits of laboratory exercises in a college curriculum, the following pages are written. Not enough is given to frighten or discourage the student, but enough, it is hoped, to arouse an interest which will impel him at every subsequent opportunity to seek for more and wider knowledge.

Food is too generally regarded as a private, individual matter rather than as a branch of social economy; it is, however, too fundamental to the welfare of the race to be neglected. Society, in order to protect itself, must take cognizance of the questions relative to food and nutrition.

Formerly each race adapted itself to its environment and trained its digestion in accordance with the available food supply. In America to-day the question is not how to get food *enough*, but how to choose from the bewildering variety offered that which shall best promote the health and develop the powers of the human being, and, what is of equal importance, how to avoid over-indulgence, which weakens the moral fibre and lessens mental and physical efficiency. In spite of all preaching, few really believe that plain living goes with high thinking. Professor Patten says that the ideal of health is to obtain *complete* nutrition. Over-nutrition as well as under-nutrition weakens the body and subjects it to evils that make it incapable of survival.

No other form of social service will give so full a return for effort expended as the help given toward better diet for children and students. Fortunately help is coming fast. The United States Government is giving much study to food problems, and by publications is making available the work of other countries. The later bulletins listed in the bibliography at the end of this volume are especially valuable. What is now needed is a general recognition of the importance of the subject.

CHAPTER II.

AIR: COMPOSITION; IMPURITIES; RELATION TO HUMAN LIFE.

THE average adult human being makes about eighteen involuntary respirations per minute. The tidal volume of air is from 300 to 500 cubic centimeters (30 cu. in.), about 2800 cubic centimeters (170 cu. in.) remaining in the lungs unless voluntarily expelled by deep breathing. The total volume expelled is often called the *vital capacity*, and is about 3400 cubic centimeters for men and 2500 for women. Even when at rest a volume of 7000 to 12,000 liters (250 to 420 cu. ft.) of air passes through the lungs of each individual in twenty-four hours. Under conditions of exercise more or less prolonged or violent this volume may be doubled. The composition of the normal inspired air by volume is approximately: nitrogen and argon 79 per cent., oxygen 20.9 per cent., other constituents 0.1 per cent. The air as it leaves the lungs contains nitrogen 79.5 per cent., oxygen 16.0 per cent., carbon dioxide 4.4 per cent., and is saturated with water-vapor. There has therefore taken place an interchange of gases (called the *respiratory exchange*), by which oxygen has passed into the fluids of the body, and carbon dioxide into the air contained within the lung-cells. Only about one-fifth of the total oxygen is abstracted during each tide.

If the composition of the inspired air varies from the

normal, this exchange is disturbed, owing to the difference in gaseous pressure and in rate of absorption which this variation causes. So delicate is the balance of the active forces that serious disturbance of the functions of the living organism occurs if the percentage of oxygen is lessened by one or two tenths, or if the pressure is raised or lowered by a fraction of an atmosphere. It is true that, like a tree bending before the wind, the organism soon adapts itself to changed circumstances, provided the change is not too great nor too suddenly made; but, like the exposed tree, the living being is never quite so vigorous and symmetrical as it would have been without the effort to overcome disadvantageous conditions.

That a permanent or habitual lowering of the oxygen in inspired air must be harmful will be readily seen from a consideration of the office of this gas in the body. To Lavoisier and Laplace we owe the knowledge that animal heat is derived from a process of combustion. Lavoisier held, however, that the seat of this combustion was in the lungs; and it is to Pflüger and his pupils that we are indebted for the proofs that it is in the tissues themselves, while the lungs serve as a clearing-house or centre of exchange.

By the union of the oxygen with the substances found in the tissues and brought to them by the circulating fluids of the body from the digested food, the heat necessary for the life and work of the body is produced. This heat is needed to keep the tissues at the temperature at which they can best accomplish their work, to give mechanical power for the involuntary action of heart and lungs, for the processes of assimilation, and to furnish the energy for all voluntary work and thought. Thus both water and food are intimately concerned in the processes in which air is an essential factor. The statement made in the first sentence of Chapter I is

therefore justified, namely, that air, water, and food together are three essentials of human existence. A certain relation between the three means health, and any disturbance of this relation means unhealth, by which term may be designated a condition of less than perfect health not yet so serious as to be called sickness.

Air being a mere mixture of the gases nitrogen and oxygen, in no definite atomic proportions, and carrying varying amounts of other substances, gaseous and suspended particles, no definite composition can be given. The difference between the air over sea or forest plateau and that of city streets or of crowded tenements seems only slight if expressed in per cent. From 20.98 per cent. of oxygen in the first to 20.87 and 20.60 in the last; from .022 per cent. of carbon dioxide in the purest air to .045 in cities and .33 in rooms, are the common variations; and yet the effect of these apparently small differences on human beings subjected to them is very noticeable. It is customary to enhance these differences by expressing the results in parts per 10,000.

That the carbon dioxide is of itself a disturbing factor is indicated by the observed fact that air which has had the per cent. of oxygen reduced by combustion to a point at which a candle will no longer burn may be made again a supporter of combustion by the removal of the carbon dioxide.

A practical application of this principle is made in the devices used in diving and in entering mines filled with irrespirable gases.

There is a sensible effort in breathing, and a feeling of discomfort is usually experienced, if the carbon dioxide accumulates to ten times the normal amount, or 40 parts per 10,000 instead of 4. This is probably due to its solubility and to its interference with the respiratory exchange, since the interchange of gases is influenced by their "partial pres-

sures." Each gas forming part of a mechanical mixture exerts a partial pressure proportional to its percentage of the mixture. For example, if atmospheric air, containing 20.81 per cent. of oxygen, is at 760 millimeters barometric pressure, the partial pressure of the oxygen would be $\frac{20.81}{100} \times 760 = 158.15$ millimeters. The following partial pressures of oxygen and carbon dioxide in inspired air and in the lung-cells show the extent of variation in different parts of the respiratory tract:

	Inspired Air.	Lung-cells.
Oxygen	158.15 mm.	122 mm.
Carbon dioxide....	0.30 mm.	38 mm.

Gas will always tend to diffuse from the region of highest to that of lowest pressure. Hence the reason for the great influence of pressure in causing the diffusion of oxygen from the inspired air into the lung-cells and for the converse movement of carbon dioxide. That *variation* in pressure has much to do with the discomfort is shown in the so-called mountain-sickness, experienced at high altitudes in rarefied air, and in the so-called caisson-disease, developed in men working in compressed air. If the passage from the caissons to the open air is made gradually, there is little trouble, but a quick change is often dangerous. A sort of mountain-sickness is experienced by many on entering a close room from the outside air. Usually this passes away in a measure as the organism accommodates itself to the new conditions. Even if the symptoms are not severe, there is a dulness or an irritability which is not conducive to the best apprehension of a difficult subject or to the fullest enjoyment of an entertainment.

This lessening of mental capacity is especially to be de-

plored in the case of school-children, who are at an age when respiration is most frequent and the need of pure air the greatest, and also when economy of effort is most demanded.

It has been said that from the study of the physiological effects of close air it seems to be indicated that the evil is due to the change in the respiratory quotient and to the consequent change in blood-pressure, which interferes with the circulation. The respiratory quotient is obtained by dividing the volume of carbon dioxide given off by that of the oxygen absorbed, and indicates how much of the oxygen has combined with carbon to form carbon dioxide, since one volume of oxygen combines with carbon to form one volume of carbon dioxide. The rate of exchange is influenced by questions of pressure, exposure, temperature, and water-vapor or moisture, muscular activity, and the like.

Water-vapor is the most variable constituent, due to the changing capacity of air for moisture at different temperatures and to the character of the earth's surface. Whether over land or water, cultivated or forest region, air at 0° C. contains only 4.87 grams of water per cubic meter, while air at 60° F. (15° C.) can take up 12.76 grams, and at 90° F. holds 33.92 grams. Since the human body is constantly giving off moisture from skin and lungs, and since this exhalation is an important factor in the bodily economy, the presence of excessive moisture in the air exercises a decided effect.

On clear, invigorating days the moisture in the air may be only 30 or 50 per cent. of that required for complete saturation at the given temperature, and although the thermometer reading may indicate 85° F. on a hot day, little discomfort follows; but let the humidity rise to 90 or 95 per cent. while the temperature remains the same, and oppression, restlessness, or languor results. Much the same effects are seen in the case of close rooms and crowded halls. The

watery vapor given off (about 20 grams per person per hour) soon saturates the air, and the consequent drowsiness and headache usually attributed to carbon dioxide will be felt; while if this moisture is removed, the same proportion of carbon dioxide would hardly inconvenience the occupants. A relative humidity of 60 per cent. is said to be the most comfortable for house temperature.

In normal man, exposure to cold increases the respiratory exchange; but if he represses shivering and keeps still by force of will, it apparently does not. Politely sitting still increases the probability of taking cold. A high temperature lessens the production of carbon dioxide and therefore saves food. This may in part account for the oppressiveness felt by well-fed and warmly clothed persons in public places none too warm for those with a more restricted diet.

Muscular activity increases respiratory exchange and causes a demand for food. A class of students passing across the campus, up several flights of stairs, into a lecture-room vitiate the air for the first ten minutes at a rate higher by one part of carbon dioxide per 10,000 than half an hour later. The exchange is also stimulated by a meal. Not only the oxidation of the food itself, but the muscular activity of the alimentary canal and probably other accompanying activities call for an expenditure of energy which is supplied by increased heat production.

Sodium sulphate is said to increase the various respiratory activities, and some have held this fact to be one reason for the beneficial effects of certain mineral waters.

The amount of carbon dioxide expired is estimated by Pettenkofer at .006 to .012 cubic foot per pound of body weight, according to the degree of exertion. Rubner considers that, in general, metabolic processes depend also upon the proportion of superficial area to the total volume of the

body, hence the smaller the animal the greater the surface to the whole mass. Children give off in proportion to their body weight about twice as much carbon dioxide as adults. Another estimate gives the output of carbon dioxide as .0027 gram per hour per square centimeter of surface.

Ammonia is also a constant component of the air of inhabited places and is washed out by rain and snow, as will be shown in Chapter VI.

Of the occasional impurities, probably the most fatal is carbon monoxide arising from leaking gas-fixtures or defective furnaces. This gas has 250 times the affinity for hæmoglobin and therefore forms with it a more stable compound than does oxygen, and hence its presence causes a deficiency of the latter gas in the blood, giving symptoms like those observed in mountain-climbing or balloon ascensions. When the blood-corpuscles become about one-third saturated the effect becomes sensible; but if the quantity of gas is considerable, the symptoms are hardly noticeable before insensibility occurs. For this reason, glowing charcoal and open gas-jets are the favorite forms of cowardly self-destruction.

In the neighborho[illegible] factories, smelting-works, ore-heaps, and of cities burning soft coal there is a noticeable amount of sulphurous and sulphuric acids, sometimes so considerable as to destroy vegetation.

In places where gas is burned, oxides of nitrogen are formed in small quantity, the effect of which is known to be harmful. Minute quantities of hydrogen sulphide and of compounds of carbon and hydrogen and of other gases may be present, especially in houses with defective plumbing or in the neighborhood of barns, cesspools, and filthy back yards. These may reach dangerous proportions, but, like carbon

monoxide, should not be permitted in or near any well-regulated household.

Soot, being insoluble, accumulates in the lungs, as a *post-mortem* examination of persons who have lived for some time in a smoky city proves; nevertheless no definite ill effects have been as yet attributed to this cause. This again confirms the inference that it is the gaseous constituents, and the varying temperature and pressure, which seriously affect the respiratory exchange.

The following results, obtained on the air of a large manufacturing city, will be of interest in this connection: *

GRAMS PER 1,000,000 CUBIC METERS OF AIR.†

Soot.	H_2SO_4.	Free NH_3.	Alb. NH_3.	HNO_3.	HNO_2.
1000 to 40000	7000 to 63000[1]	100 to 1000	97 to 557	45 to 1063	0 to 155

[1] Partly H_2SO_3.

It is probable that much of the danger ascribed to sewer-air arises from other causes. Since the atmosphere in sewer-pipes is always moist, the only probable source of organisms is the splashing of the water. Only about one-half as many organisms have been found in the air above flowing sewage as in out-door air. Professor Carnelley and Dr. Haldane found only one-half as much carbon dioxide and one-third as much organic matter in such air as in that of the streets above.

Beyond individual control, and in a measure beyond general control, there exists suspended matter in the air: fine volcanic dust, pollen, spores of moulds and algæ, dried bacteria, diatoms, small seeds of plants, soot and the finely pulverized earth from roads and cultivated and barren lands. To this portion of the air we owe beautiful sunsets and disagreeable fogs. To it many affections of the throat and

* Mabery: *J. Am. Chem. Soc.*, 17 (*1895*), 105.

† See also Bailey: "The Air of Large Towns," *Science*, Oct. 13, 1893.

Irwin: "The Soot Deposited on Manchester Snow," *J. Soc. Chem. Ind.* (*1902*), 533.

eyes are due, and by it disease may be transmitted. Some kinds of dust lodge in the air-cells and by irritation render the individual liable to disease, as statistics of the mortality in dust-producing trades show. In the air of houses this impurity increases a thousand-fold by means of the wear of furnishings and the accumulation on them of deposited particles, by means of furnace-ashes and dried *débris* of all kinds. Only recently have the dangers of this part of the air we breathe been distinctly pointed out.

Aitken * estimated that a cubic inch of air may carry 2000 dust-particles in the open country, 3,000,000 and more in cities, and 30,000,000 in inhabited rooms. Among these millions there may be found from ten to several hundred micro-organisms, moulds, and bacteria, and, under certain conditions, pathogenic germs.

As methods of culture become more satisfactory and tests more universal, it may be demonstrated that many old or long-inhabited buildings furnish several varieties of pathogenic germs constantly to the air.

According to some authorities, the most dangerous contamination of the air is the "crowd-poison," or organic matter given off with the carbon dioxide and moisture in the breath. References will be found in the bibliography to discussions of the subject. No evidence has ever been found in the course of investigations in this laboratory, covering a period of fifteen years, that *the healthy* human lung gives off any toxic substance. The same conclusion is reached by Dr. Emanuel Formánek of the Hygienic Institute at Prague after a long series of critical experiments.†

* *Nature*, 31 (*1870*), 265; 41 (*1880*), 394.

† *Archiv für Hygiene*, 38 (*1900*), 1.

CHAPTER III.

THE PROBLEM OF VENTILATION.

FROM the preceding chapter it will be seen how important is the purity of the air to human well-being, and how essential is the diffusion of the knowledge of the methods by which it can be secured. It is often said that artificial ventilation is a modern necessity. Remains of aqueducts and sewers have testified to the sanitary intelligence of historic peoples, but the ventilating fan does not seem to have been included, although natural ventilation by shafts and flues has been practised since man came out of cave-dwellings. It is true that customs have changed as to many items of daily life. In cities more people live on an acre of ground, thus fouling the air above and the ground beneath; more factories are belching smoke; more coal is burned; houses are built with smaller rooms and less pervious walls; schools and lecture-halls are more crowded; people are better fed, consequently there is more garbage; streets are macadamized, allowing finely ground particles to fill the air with every puff of wind; gas-pipes traverse the walls of every house and pass under every street; carpets, draperies, and much passing in and out cause an accumulation of dust unknown fifty years ago. Kerosene lamps require more oxygen than many candles. Besides, people are becoming less hardy and more sensitive physically, so that well-ventilated living-spaces are a modern necessity if human efficiency is to be maintained.

As we have seen, the air of open spaces presents only very slight variation at the same level or for several thousand feet above it. The movement of the air caused by the wind is usually so rapid, and the reservoir of air for many miles above the earth is so immense in comparison with the thin vitiated layer, that there are only to be considered enclosed spaces in which human beings remain for a period of time.

To supply the 7000 to 12,000 liters (250 to 430 cubic feet) of tidal air per person in maximum purity, there must be brought to the person at rest some 1800 cubic feet of air per hour. If he were in an air-tight chamber 12 feet square and 8 feet high, a man would reach the limit of purity in 38 minutes; but no ordinary room is air-tight, and when the difference between inside and outside temperature is considerable, a rapid exchange is taking place even with doors and windows shut.

To secure the passage of this large volume of air through a small space without causing a draft that will be objected to by the abnormally sensitive victim of modern luxurious habits is the problem of ventilation—one not yet satisfactorily solved.

The sanitary engineer is expected to design the apparatus and to aid the architect in so placing and proportioning flues, inlets, and outlets as to accomplish the desired results. Unfortunately it is too common, especially in the case of school and college buildings, to economize in the first cost by dispensing with the services of the expert and to leave to the builder and "practical" architect all such details. In any case, it often becomes necessary to call in the chemist to prove the need of reform, or to show by the composition of the air whether or not the ventilating plant is doing its work efficiently.

The sanitary inspector, whose business it is to decide

upon the legal questions connected with tenements and factories, must often rely upon chemical examinations of the air. The validity of these depends not only upon the perfection and delicacy of apparatus and methods used, but also upon the judgment and intelligence with which the samples are taken.

Many errors in the construction of buildings have been perpetrated because of an ignorance of the physical properties of air and, consequently, a mistaken notion of the behavior of a vitiated atmosphere. The lecturer on popular science who some forty years ago enlightened (?) the community on the chemistry of daily life was accustomed to use, as a striking illustration, a glass jar in which a small lighted candle was instantly extinguished on pouring into the jar a tumblerful of carbon dioxide which had been collected for the purpose. The inference was plain: carbon dioxide was heavier than air, therefore it falls to the floor and must be allowed to flow out as if it were a stream of water. Further confirmation of this inference was found in the frequently observed fact that a candle lowered into a well often went out just before the water was reached.

Hence for many years the habits of thoughtful persons were formed on a belief in the heaviness of carbon dioxide or "bad air," and in its tendency to go to the bottom of the room and into any holes it could find. This is only another instance of danger in half a truth. When do we find cold carbon dioxide generated in living-rooms? And how warm must the gas be in order to be lighter than the ordinary air? How quickly does diffusion take place? Until within a very few years the almost unanimous belief among the so-called educated classes was that the bad air could be let out by opening a window at the bottom, and, in spite of the lessons which might have been learned by any observant person in

hanging pictures or Christmas greens, the common practice in private houses, churches, and schools is to open the windows at the bottom.

All ordinary vitiation of the air proceeds from a heated source. Human breath and warm air are lighter than cold air and rise even with their burden of carbon dioxide. It is only when they impinge on a very much colder surface, as on the window-pane on a very cold day, that they become sufficiently chilled to fall without mixing with the neighboring air. The freedom with which the gases of the air mix, as well as the rapidity of the action, may be illustrated in a variety of ways. Open a bottle of any volatile and pungent substance, as ammonia or hydrogen sulphide, in one corner of a room, and almost instantly it may be perceived in the most distant part.

In natural ventilation we have only to avail ourselves of these characteristic properties of gases; and whether we wish to get rid of the light gases escaping from furnace, stove, or gas-pipe, or of the specifically heavier carbon dioxide, or of the most dangerous dust, we must furnish an outlet at the place to which the fleeing enemy first arrives, lest it turn and rend us for our ignorance.

It is usually sufficient to furnish this opportunity, the current caused by this willing escape drawing in sufficient fresh air to take its place except in very crowded rooms, and even these might be so ventilated provided the whole roof were one large ventilating flue. If, however, the air is to be drawn from the bottom of the room, its unwilling current must be pulled by a superior force, as by an open fire on the hearth, which heats the air above it so that, in rushing into the free air above, it draws after it all things movable within reach. Then, indeed, even the top of the room becomes quickly cleared and no corner can escape; but if the fire be

long gone out and the chimney cold, the reverse takes place and cold, heavy air sinks to the floor, helping to confine the bad air at the top of the room.

What the cold chimney cannot accomplish the mechanically driven fan can do, namely, by a slight compression force a draught even up a cold chimney. In this case the very unwillingness of the air to take the prescribed path helps in the result as water forced through a mill-wheel develops mechanical work. The warmed fresh air forced in near the top of the room loses its velocity as it mingles with that already present, and finds its way along the line of least resistance to the opening provided at the bottom of the room, into the flue, but only in case there is no easier way.

Open doors or windows interfere with the prescribed course, and blindness to this fact on the part of the occupants of mechanically ventilated buildings has caused unjust complaints of the system. The necessity of regulating the consumption of fuel and admission of fresh air in accordance with variations of temperature, as well as the great care and trouble this involves, renders the " natural " system of ventilation practicable only in less crowded dwelling-houses where intelligence can control the varying factors. For schools, lecture-halls, or any enclosed spaces occupied by numbers of persons at one time, some form of mechanical ventilation offers the only hope of good air in cold climates. What form that shall take is for the engineer to decide. The chemist's part is to devise means of readily determining whether the persons in charge of the apparatus are using it to gain the results designed by the expert.

As a test of how nearly practice approaches the theoretical value, carbon dioxide is taken as the indicator, since it is present in a thousand times larger quantity than any other impurity and since it is easily determined. If the air has

only the normal amount of carbon dioxide, it is but rarely that it contains enough of anything else to be harmful. The presence of hydrogen sulphide or of coal-gas is betrayed by the odor. Where the gas-supply is "water-gas," containing 30 to 40 per cent. of carbon monoxide, there is greater danger; but if legal restrictions are complied with, the presence of this can be detected in the same way, viz., by the odor.

Danger may also arise from the presence of so-called "sewer-gas," which, however, is not a single gas, but a most complex and variable mixture of the more volatile products of decomposition. For the detection of "sewer-air" chemical tests are of little value, since it contains no constituent in sufficient quantity and with sufficient regularity to serve as an index of its presence. Ill-smelling gases are given off only when sewage is about eighteen hours old, hence dirty house-pipes are the chief cause of foul air. The delicate sense of smell is of value here. Indeed, an educated nose is most essential in all examinations of house-air. "Crowd-poison," if it exists, keeps company with the increase of the products of respiration, and if the incoming air is strained or taken from a place free from dust, the particles added to the air which is in the rooms will also be removed with the carbon dioxide.

From nearly all points of view, carbon dioxide is an indicator of the efficiency of ventilation, especially if combined with observations of temperature and moisture. It is an indicator also readily understood and accepted by the public.

The principles of ventilation may be readily illustrated to a class by means of simple apparatus. Such an apparatus, using candles and designed to illustrate the section of an ordinary room, is shown in Fig. 1.

In testing the efficiency of ventilation of any room or

building, it is necessary to determine first the direction of the air-currents, for there can be no ventilation without currents. If the architect who designed the building, or the engineer who advised the architect, is responsible, then the chemist has only to follow directions in taking the samples; but frequently the chemist, as well as the sanitary engineer, is called

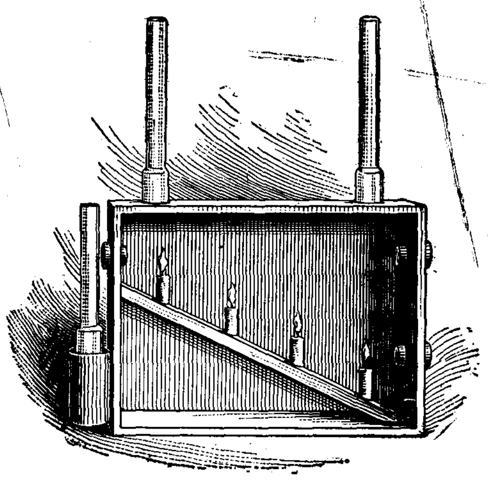

FIG. 1.—Apparatus to Illustrate the Principles of Ventilation.

upon to make tests of rooms and buildings of which no plans are available.

In the examination of such rooms, then, the position of flues or conduits, both inlets and outlets, which were intended to convey air or which serve without such intention, should first be located. Possible avenues of ingress and egress by means of loose windows, cracks around doors, etc., are to be considered. When there is great difference of temperature between outer and inner air, these allow of quite rapid change of air. Some means of rendering visible these currents is desirable, such as smouldering paper, magnesium powder, or fumes of ammonium chloride.

When the direction and intensity of these air-currents have been determined, the places from which the air-samples are to be taken may be chosen. It will be evident in what part of the room stagnation occurs and where eddies are formed, also where the air escapes.

In a room or building without artificial ventilation the air-currents are seen to be ascending until they become chilled, when they fall. An empty room will not show so decidedly the rise of air-currents as will an occupied one in which the vitiated air, being much warmer, rises more rapidly and cools less quickly. In taking the samples all accidental means of contamination must be avoided and the occupants must be quiet, for the moving of persons causes disturbance in the air-current. There is room for great ingenuity in this part of the examination, as circumstances greatly modify the method of procedure. A fair sample, or a sufficient number of samples to give a fair average, must be taken.

Having secured and analyzed the samples of air, the decision as to the efficiency of ventilation must be rendered.

If the room examined is a study- or recitation-room, the stratum of air at the level of the students' heads should not contain over 8 or 9 parts per 10,000 of carbon dioxide, should not show a temperature of over 70° F., nor a humidity of over 35 or 50 per cent., and these conditions should be maintained for hours at a time.

For lecture-halls and spaces occupied for only one hour at a time, with ample time between occupation, it is admissible to allow 9 to 11 parts. If fan ventilation is used, the outlet should give the average degree of contamination. If no system is used, the air at the top of the room is first vitiated; only at the end of twenty minutes to half an hour do the lower layers begin to show it.

CHAPTER IV.

ANALYTICAL METHODS. DETERMINATION OF CARBON DIOXIDE.

General Statements.—Since the earliest crude attempts at the determination of carbon dioxide all chemical methods have been based on its absorption by alkalies or alkaline earths. It may be the diminution in volume of the air through absorption of the carbon dioxide that is measured; the carbon dioxide may be separated as barium carbonate and weighed; the reduced alkalinity of the absorbing liquid may be determined; or the carbon dioxide may be set free from the absorbing solution and its volume determined directly; all of these methods have been used with more or less success. For determining with great exactness the amount in out-door or "fresh" air it is customary to aspirate large quantities of air, sometimes as much as 600 liters, through the absorbing solution. For determining the amount in the air of rooms a much smaller sample, collected in calibrated vessels, of from one to eight liters, is preferable.

Where it is necessary to absorb large quantities of the gas in a slight volume of solution, potassium or sodium hydroxide is used. For nearly all of the "popular tests" calcium hydroxide, lime-water, is used because of its harmless nature and the ease with which it can be obtained from the corner drug store, or from the quicklime procured from the mason's barrel. For volumetric methods barium hydroxide is generally preferred, because of the less solubility of the

barium carbonate, it being only about two-thirds as soluble as the calcium salt. The very avidity with which these substances take up carbon dioxide is a hindrance to the preparation of standard solutions in an atmosphere already rich in it. When once prepared the solution must be preserved with especial care, since contact with the hands or a whiff of the breath will reduce its strength and vitiate the results. All such solutions are best kept in bottles well protected from the air by tubes filled with soda-lime and delivered from a burette, as described on page 36.

Pettenkofer Method.—The method which is generally employed for the estimation of carbon dioxide in the air of rooms is some modification of that originally devised by Pettenkofer.*

Principle.—In principle this consists in absorbing the carbon dioxide from a known volume of air in barium hydroxide solution and titrating the excess with standard sulphuric acid. It is essential for the *complete* absorption of the carbon dioxide that the barium hydroxide be *largely* in excess, so that not more than one-fifth of it is neutralized; furthermore, the absorbing solution must be shaken up with the air for a considerable time.

Collecting the Samples.—The samples are collected in four- or eight-liter bottles, the volume of which is accurately known, the bottles having been calibrated by weighing them filled with water. These bottles are provided with a rubber stopper carrying a glass tube over which a rubber nipple is slipped. They are filled with the air to be tested by means of a pair of nine-inch blacksmith's bellows, fitted with valves so arranged as to draw the air out of the bottle. The bellows is connected with a three-quarter-inch brass

* Pettenkofer: *Annalen*, **2**, Supp. Band (*1862*), p. 1. Gill: *Analyst*, **17** (*1892*), 184.

tube reaching nearly to the bottom of the bottle; fifteen or twenty strokes should be sufficient to replace the air in a four-liter bottle. At the time of collecting the samples the following observations should be recorded: *Room, date, time, weather, place in room, number of people present, number of gas-jets or lamps burning, condition of the doors, windows, and transoms; in short, everything that would tend to affect the amount of carbon dioxide in the air, or to cause currents or eddies.* The bottles should be distinctly labelled and their volumes recorded. If the temperature at the point where the samples are collected should be essentially different from that of the laboratory, the bottles should be allowed to stand in the laboratory for half an hour, or until they have attained its temperature.

Directions for Laboratory Work.—The solutions of barium hydroxide and sulphuric acid which are used are approximately of equal strength; but since it is impracticable to prepare exact solutions of barium hydroxide and to keep them without change, the exact value of the barium hydroxide solution must be found by titration against the standard sulphuric acid, which is made of such a strength that 1 cubic centimeter is equivalent to exactly 1 milligram of CO_2. This standardization, as well as the subsequent titration, is best made in a small flask to lessen the error from absorption of carbon dioxide from the air. It will be found most generally satisfactory to measure into the flask about 25 c.c. of the barium hydroxide, add a drop of phenolphthalein solution, and titrate with the sulphuric acid to the disappearance of the pink color. In all cases the first end-point should be taken as the correct one, because the pink color will sometimes return on standing. This is due to the presence of minute quantities of potassium or sodium hydroxide in the solution. The alkali sulphates will react

with any barium carbonate which may be suspended in the liquid with the formation of alkali carbonates which give a pink color with phenolphthalein.* The standardization should be repeated until consecutive results are obtained which check within 0.2 per cent. of each other.

Determination.—Remove the cap from the tube in the stopper of the bottle, insert the tube-tip of the burette so that it projects into the bottle, and run in rapidly 50 c.c of barium hydroxide from the burette. Replace the cap and spread the solution completely over the sides of the bottle while waiting three minutes for the burette to drain. In doing this take care that none of the solution gets into the cap. Note carefully the temperature and barometric pressure. Place the bottle on its side and roll or shake it at frequent intervals for forty-five minutes, taking care that the whole surface of the bottle is moistened with the solution each time. At the end of this time thoroughly shake the bottle to mix the solution, remove the cap, and pour the solution into a stoppered bottle of hard glass of 40 c.c. capacity, taking care that the solution shall come in contact with the air as little as possible. Under these conditions a full well-stoppered bottle may safely stand for days before titration. For the titration, measure out with a pipette 25 c.c. of the clear liquid into a 75-c.c. flask and titrate it with the sulphuric acid as in the standardization. The difference between the number of cubic centimeters of standard acid required to neutralize the total barium hydroxide before and after absorption gives the number of milligrams of dry carbon dioxide in the sample tested. The results may be expressed in parts per 10,000, by volume, under

---

* This action can be largely prevented by including a small amount of barium chloride when making up the barium hydroxide solution (see p. 238.)

standard conditions (0° and 760 mm.), saturated with moisture (Method 1) or dry (Method 2). Tables for this purpose will be found in Appendix A.*

Example.—Data: Standardization, 1 c.c. $Ba(OH)_2 =$ 1.020 c.c. H_2SO_4; volume of bottle = 8490 c.c.; $Ba(OH)_2$ used = 49.9 c.c.; H_2SO_4 used = 21.1 c.c.; temperature and pressure = 21° and 766 mm.

Before absorption

$$49.9 \text{ c.c. } Ba(OH)_2 = 49.9 \times 1.020 = 50.90 \text{ c.c. } H_2SO_4.$$

After absorption

$$49.9 \text{ c.c. } Ba(OH)_2 = \frac{49.9}{25} \times 21.1 = 42.12 \text{ c.c. } H_2SO_4.$$

∴ (8490 − 49.9) = 8440.1 c.c air contain 50.90 − 42.12 = 8.78 mg. CO_2.

Method 1.—1 c.c. CO_2 saturated with moisture at 21° and 766 mm. weighs 1.79624 mg. (Table II, Appendix A).

∴ 8.78 mg. $= \frac{8.78}{1.79624} = 4.887$ c.c. CO_2 saturated with moisture.

Hence in 10,000 c.c. of air there are $\frac{4.887}{8440.1} \times 10{,}000 =$ 5.79 parts CO_2.

Method 2.—In this method the volume of air is reduced to standard conditions of temperature and pressure, under which conditions the weight of a cubic centimeter of dry CO_2 is a constant quantity.

Thus $v' = v[1 + 0.00366(t' - t^\circ)]$. $v' = 8440.1$, $t' = 21^\circ$, $t^\circ = 0^\circ$; hence $v = 7837.7$ c.c.

---

* Dietrich's Table, the one in general use, is not absolutely correct, the weight of a cubic centimeter of carbon dioxide at 0° C. and 760 mm. being somewhat different from that given at present by the best authorities, but it is sufficiently close for any but the most exacting work.

Also, $v : v'' = H'' : H$, or $7837.7 : x = 760 : (766 - 18.5)$. (18.5 = tension aqueous vapor at 21°.)

Then $v'' = 7709$ c.c. = volume of air at 0° and 760 mm.

1 c.c. CO_2 at 0° and 760 mm. weighs 1.9643 mg.

$\frac{8.78}{1.9643} = 4.469$ c.c. CO_2. $\frac{4.469}{7709} \times 10{,}000 = 5.79$ parts CO_2 per 10,000.

Two samples are to be taken, closely following the notes, and the results calculated by both methods before collecting more samples. Then some one room may be taken and the quality of the air determined for the different hours of the day, or a comparison of different rooms may be made, or a building may be tested as a whole. All data and results obtained should be arranged in tabular form on a separate page of the note-book.

Notes.—This method of collecting the air in a large bottle possesses a decided advantage over the method of slowly drawing the air through barium hydroxide contained in a long tube, in that a sample represents the condition of the air at a given time and not its average condition for a period of an hour or so.

In collecting samples, care must be taken to avoid currents of air or the close proximity of people. Duplicate samples can be obtained only in empty or nearly empty rooms. Even two sides of the same room will probably show differences, but two samples taken carefully side by side ought to agree within 0.05 part per 10,000.

While the Pettenkofer method is convenient, and for a long time has been the favorite, it is now quite generally recognized that it contains inherent sources of error which can be obviated only by the use of complicated apparatus and extreme skill in manipulation. That the method can be employed to obtain results of the highest degree of accu-

racy has been shown by Letts and Blake in an exhaustive study of the question. The refinements found necessary, however, place their modification out of consideration for ordinary use.

The principal source of error lies in the necessity for titrating the alkaline liquid within the "area of contamination," the exhaled breath containing on an average from 50 to 100 times as much carbon dioxide as the air under examination. Other important sources of error which have been found to lead to erroneous results are the action of the caustic alkali on the glass of the large bottle, and the presence of small amounts of the precipitated barium carbonate in the solution during the titration. It should therefore be borne in mind that results obtained by this method may be too high even though agreeing closely among themselves.

The small bottle to which the solution is transferred for settling should be of such a size (40 c.c.) that the volume which drains readily from the large bottle when the glass tube is flush with the stopper shall a little more than fill it. That is, no air-space should be left to serve as a medium for transpiration from the surrounding air if the bottle stand for some hours. On the other hand, there should be a sufficient excess over the 25 c.c needed to ensure the filling of the pipette at the first trial. This pipette is globular in shape, with a stem of small diameter above and below the bulb. The last drop is taken off by touching the neck of the flask after counting ten from the time it is empty. It is then set upright to drain; the drop which collects is gently shaken out before the next titration. The error is less than if it were rinsed with water each time.

All rubber stoppers which are used should first be boiled

in dilute caustic soda, then in a dilute solution of potassium bichromate and sulphuric acid and thoroughly washed.

Walker Method.—A comparatively simple method in which the errors inherent to the Pettenkofer process are avoided has been proposed by Walker.*

The method has been carefully studied in this laboratory † and found to be capable of great accuracy.

Principle.—To a definite volume of air, usually 1 to 2 liters, is added a measured amount of standard barium hydroxide, care being taken to avoid contact of the solution with the air. After the absorption of the carbon dioxide, the solution is filtered under reduced pressure through asbestos and the clear barium hydroxide received into a known excess of standard hydrochloric acid. The absorption vessel is rinsed out with water free from carbon dioxide. The excess of acid is then determined by titration with barium hydroxide.

Reagents and Apparatus.—The standard solutions used are N/50 hydrochloric acid, and barium hydroxide, approximately N/100, its exact strength relative to the acid being found daily by titration. It will be found advantageous to use solutions of this strength, somewhat more dilute than those recommended by Walker, on account of the increased accuracy with air nearly free from carbon dioxide. The decreased range of usefulness is readily compensated by the employment of smaller samples of the impure air.

The barium hydroxide, which is usually made up in quantities of 8 liters at a time, is preserved with especial care. The hard-glass bottle containing it, placed on a high shelf so that the measuring apparatus can be filled directly by gravity, is heavily coated on the inside with barium

---

* *Proc. Royal Dublin Soc.* **9**, 107 (*1900*).

† Woodman: *J. Am. Chem. Soc.* **25**, 150 (*1903*).

carbonate. The bottle is closed by a rubber stopper with two holes, one of which carries the siphon tube dipping to the bottom of the bottle and supplying the measuring burette, while the other carries a fairly large glass T (Fig. 2).

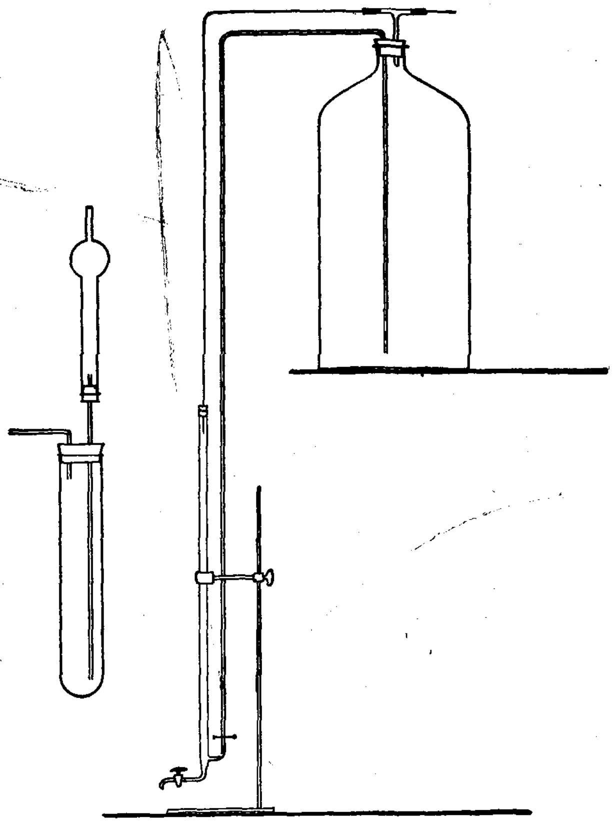

FIG. 2.

From one-half the horizontal arm of this projects a glass tube carrying the device for protecting the solution. This device is shown drawn on a somewhat larger scale in the same sketch. The horizontal tube enters the T tube far

enough to support the apparatus. Connection is made by a closely fitting rubber tube. The longer tube, reaching nearly to the bottom of the test-tube, carries a fairly good-sized "calcium chloride tube" which contains soda-lime, enclosed in the usual manner by plugs of cotton. The test-tube contains 5 to 10 c.c. of dilute (about N/50) caustic potash colored with phenolphthalein, the whole serving to indicate the efficiency of the soda-lime. From the other end of the horizontal arm of the T projects in the same way a long tube bent at right angles fitting by a rubber stopper into the top of the burette, thus making the whole a closed system, much after the manner of Blochmann.* Any air entering the bottle when the solution is drawn from the burette or when the burette is filled again must have come through the protecting apparatus. This will be found efficient if care is taken in the selection or preparation of the soda-lime.†

The burette used for the barium hydroxide is a glass-stoppered one, differing somewhat from the ordinary form. The lower portion below the graduations is narrowed and bent at right angles. This horizontal part is fitted with an ordinary glass stop-cock. This gives no trouble when kept well vaselined. The tip of the burette is kept covered with a little rubber cap when not in use to prevent clogging from the formation of carbonate. The apparatus could easily be arranged with a special pipette for the delivery of a definite charge of baryta solution if desired.

The bottles used for the collection of samples are of hard glass of about 2 liters capacity, the exact volume being determined in each case to a cubic centimeter. The bottle

* *Ann. Chem.* (Liebig), **237**, 39 (*1887*).

† Directions for preparing a good quality of soda-lime are given by Benedict and Tower: *J. Am. Chem. Soc.*, **21**, 396 (*1899*).

is closed by a rubber stopper through which pass two glass tubes about 7 mm. in diameter. The longer tube reaches almost to the bottom of the bottle; the shorter tube ends internally just flush with the stopper. Both tubes project externally about two inches and are provided with stop-

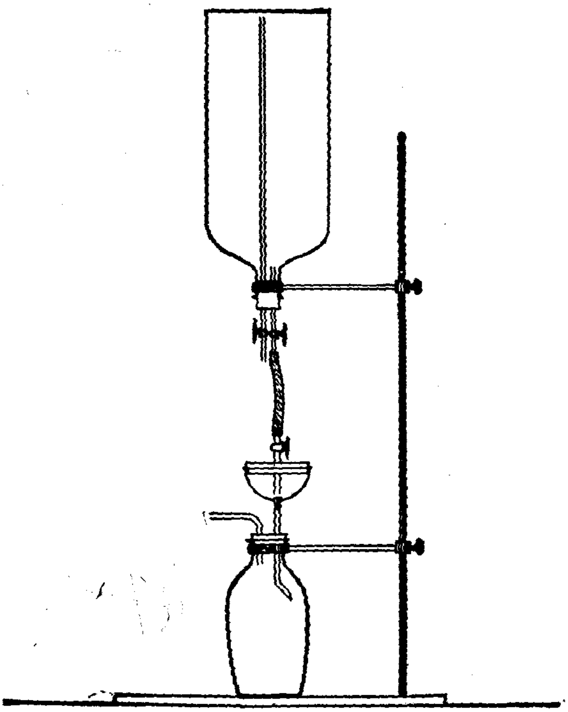

FIG. 3.

cocks at slightly different levels so as to permit of convenient manipulation. There is permanently attached to the upper end of the longer tube a piece of rubber tubing 1 inch in length which serves to connect it with the tip of the baryta burette. The stop-cocks may be replaced by rubber tubing and Mohr pinch-cocks if desired.

The apparatus used for filtering off the barium carbonate is shown in Fig. 3.

To the base of a ring-stand is firmly clamped an ordinary filter-bottle of about 250 c.c. capacity closed by a rubber stopper with two holes. Through one of these passes a tube leading to the suction-pump, through the other the tube of a Gooch filtering-funnel, the upper part of which is cut off so that the remainder above the constriction is about an inch long. The tip projecting into the bottle is bent so that the liquid shall flow down the side and not spatter. A rather close coil of stout platinum wire placed above the narrow portion serves as a support for the asbestos filter, or can be removed if it is desired to use a cotton plug instead. In the upper part of the tube is tightly fitted a rubber stopper through which passes a narrow glass tube extending to within one-eighth inch of the asbestos layer and provided above the stopper with a stop-cock. Connection is made with the short tube of the inverted bottle by means of a rubber tube about 8 inches in length.

Procedure.—(*a*) *The Absorption.*—Insert the tip of the baryta burette into the short piece of rubber tubing and run in approximately 50 c.c. with both stop-cocks open. Close the outlet cock, pinch the rubber tube with the fingers, detach it from the burette and insert a bit of glass rod to keep out the air. Finally close the stop-cock. Drain the burette three minutes and take the reading as usual. Carry out the absorption of the carbon dioxide as described in the Pettenkofer method, except that 25–30 minutes is ample for the absorption.

(*b*) *The Filtration.*—While the absorption is in progress prepare the filter. Apply slight suction and add enough asbestos fiber suspended in water to form a felt about a sixteenth of an inch thick over the platinum coil. Wash it

once or twice with distilled water. If properly done the water should flow from the filter-tube in a continuous stream when the pump is running at good speed, but should drop only slowly when the suction is slight.

Prepare also about 100 c.c. of "wash-water" by adding to distilled water 1 c.c. of a 10 per cent. barium chloride solution and three drops of phenolphthalein, then titrating with the barium hydroxide to a faint permanent pink. Keep in a stoppered flask until wanted.

Measure into the filter-bottle 25 c.c. of the hydrochloric acid.

The arrangement of the bottle and filter during filtration is shown in the figure.

Open the stop-cock of the shorter tube and turn on the pump. Now slowly open the filter stop-cock and control the flow of liquid entirely with this cock. The barium carbonate remains on the asbestos, and the clear baryta solution which passes through is at once neutralized by the hydrochloric acid. When all the liquid has passed through allow the pump to act for a few minutes to partially exhaust the bottle, then close the filter-cock.

Pour some of the wash-water into a small beaker, dip the end of the longer tube into it, and by opening the stop-cock allow about 20 c.c. to flow into the bottle before again closing it. Unclamp the bottle and shake thoroughly while held horizontally and still attached to the filter. Clamp it in place again, turn on the pump, and drain off the wash-water. Repeat this twice. Generally at the third washing the wash-water is no longer turned pink, showing that the barium hydroxide has been completely removed. Remove the stopper and cock from the filter-tube and draw the remainder of the wash-water through the filter to wash down the sides of the tube.

(*c*) *The Titration.*—Transfer the acid solution to a 6-inch porcelain dish and run in barium hydroxide to the production of a distinct pink color. Return the solution to the filter-bottle and pour it again into the dish. One or two drops of the alkali solution will suffice to finish the titration.

Note.—It will be seen that in this method the errors of the other are largely avoided. The alkali solution is made weaker, and its time of contact with the glass of the bottle is shorter; the barium carbonate is entirely removed if the filtration is properly conducted; the titration is not carried out in an alkaline solution, but in one that is acid.

For a discussion of the results obtained the papers cited above may be consulted.

Popular Tests.—In addition to the standard methods for determining carbon dioxide, types of which have just been described, there are so-called "popular methods" which can often be used with advantage. If within the space of a few hours some fifty or one hundred tests are to be made, and comparative results rather than great accuracy are required, some simpler form of apparatus is desirable.

Such an apparatus, to be satisfactory, should meet, so far as possible, the following requirements:

(1) It should be sufficiently compact and portable to be carried in the hand from place to place, and should contain within itself everything required for the complete determination of the carbon dioxide.

(2) It should be as simple in construction as possible, and its use should not involve delicate measurements; if automatic in its action, so much the better.

(3) If possible, the apparatus should be made entirely of glass, avoiding prolonged contact of corks or of rubber connectors with any dilute solution which may be used.

(4) It should be so constructed as to protect the solution at all times from the carbon dioxide of the air, especially while the determination is being made, because of necessity such an apparatus must be used within the area of contamination.

(5) The complete apparatus should be sufficient for fifty or more determinations.

(6) It must be capable of giving results of a reasonable degree of accuracy, say within 0.5 part of carbon dioxide in 10,000 parts of air, in the hands of persons having little or no chemical knowledge and minimum skill in manipulation.

(7) If a solution be used in the apparatus it should be one which can be prepared easily from chemicals readily obtained; the solution must maintain its efficiency for a reasonable length of time, if protected from external influences; and the solution should be one that is not at all dangerous or obnoxious to use.

Experience with several forms of simple apparatus which have been proposed has shown that none of them answers perfectly to the above requirements. Methods which were satisfactory a few years ago are no longer reliable. The question at present is not whether the air contains 15 or 20 parts of carbon dioxide per 10,000, but whether it contains 5 or 8.

Simplicity of apparatus is much to be desired, but it should not be gained at too great sacrifice of accuracy. Even when no greater precision is required than is necessary to meet the demands of practical work, it is out of the question to measure the test solution by means of an ordinary pipette or to preserve it for any length of time in stoppered vials; the strength of the solution is almost certain to be reduced by contamination with the breath, by contact with rubber or cork.

It must ever be borne in mind that extreme care is necessary in the preparation and use of these very dilute solutions, the strict observance of conditions which might well be neglected in ordinary analytical procedures being here an essential factor of success.

For the preservation and measuring of the test solution the authors have devised an apparatus which appears to answer the above requirements, and in actual practice has been found satisfactory.*

The essential feature of this apparatus consists of an automatic pipette for measuring the test solution. This is a modified form of the pipette first proposed by G. P. Vanier and in use in this laboratory for a number of years. A general idea of it may be had from Fig. 4. The manner of using it is extremely simple. The test solution is preserved in a 1-liter bottle of hard glass provided with a doubly perforated rubber stopper. Through one opening passes the siphon tube of the pipette, which is sufficiently long to reach to the bottom of the bottle; through the other passes a glass tube ending just below the stopper and connected with a small bottle containing fresh soda-lime. By means of the three-way cock the solution is allowed to flow into the small inside pipette until it overflows. The stop-cock is then turned and the solution allowed to flow out at the lowest point. The pipette is made of such a size as to deliver exactly 10 cubic centimeters. The entrance of atmospheric car-

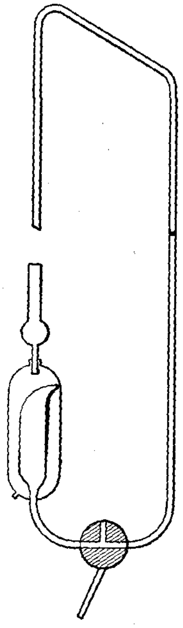

FIG. 4.—Automatic Pipette.

* Air Testing for Engineers. A. G. Woodman and Ellen H. Richards: *Tech. Quar.*, 14, 94 (*1901*).

bon dioxide as the solution flows out is prevented by the small tube containing soda-lime or bits of caustic potash. The excess of liquid which accumulates in the overflow reservoir may be drawn off when desired. The bottle and pipette are contained in a wooden case about 20 × 8 × 7 inches, outside dimensions, and with the solution weigh about 8 pounds. The case is furnished with a handle at the top so that it may be carried readily in the hand from place to place. The bottle is fastened to the case, and the lower end of the pipette is clamped to a wooden support to keep it from swinging. The stopper should be firmly fastened to prevent loosening.

The bottle should be thoroughly cleaned and washed with potassium bichromate and sulphuric acid, and it is best also to steam it for half an hour or so. As a further measure of precaution the rubber stopper is boiled with dilute caustic potash and thoroughly washed, although the solution can come in contact with it only through splashing while the case is being carried.

The measuring apparatus has been used in connection with the two simple tests which the experience of the authors has shown to be most generally satisfactory, viz., that proposed by Dr. G. W. Fitz and the method of Cohen and Appleyard.*

In principle these two methods are quite distinct. The Fitz method is carried out by shaking a small quantity of dilute lime-water, colored pink by phenolphthalein, with successive portions of air until the solution is decolorized. The greater the amount of carbon dioxide in the air, the less will be the volume of air required to neutralize the lime-water, and *vice versa*. That is, the amount of lime-water

* *Chem. News*, 70, (*1894*), 111.

remaining constant, the amount of carbon dioxide will vary in a certain inverse ratio to the volume of air.

The method of Cohen and Appleyard is based upon the fact that if a dilute solution of lime-water, slightly colored with phenolphthalein, is brought in contact with a sample of air containing more than enough carbon dioxide to combine with all the lime present, the solution will be gradually decolorized, the length of time required depending upon the amount of carbon dioxide present. That is, the quantity of lime-water and the volume of air remaining the same in each case, the rate of decolorization will vary inversely with the amount of carbon dioxide. The method is scientific in principle because it recognizes the fact that the absorption of carbon dioxide by dilute alkali solutions is a *time*-reaction.

The method of preparation of the solutions and the manner of making the tests which have been found to give the best results will be described in detail, since experience has shown that these directions cannot be too minute.

Preparation of the Test Solution.—The solution used is a dilute solution of lime-water colored with phenolphthalein. To freshly slaked lime add twenty times its weight of water in a bottle of such size that it is not more than two-thirds full. Shake the mixture continuously for 20 minutes, and then allow it to settle over night or until perfectly clear. The resulting solution is the stock lime solution, or "saturated lime-water." If made in the manner indicated, each cubic centimeter of it ought to be very nearly equivalent to 1 milligram of carbon dioxide. If, however, it is desired to know the strength of it more exactly, it may be determined by standard acid.

To prepare the "test solution," pour into the 1-liter bottle of the testing apparatus 1 measured liter of distilled

water, and add 5 c.c. of a solution of phenolphthalein (made by dissolving 0.7 gram of phenolphthalein in 50 c.c. of alcohol and adding an equal volume of water). Stand the bottle on a sheet of white paper and add the "saturated lime-water" drop by drop from a pipette, shaking the bottle thoroughly after each addition until a faint pink color is produced which is permanent for one minute. Now add 12.6 c.c. of the "saturated lime-water," shake, and immediately connect the bottle again to the apparatus.

To shorten the time required in testing air which is low in carbon dioxide, it may be found advantageous to use a solution only half as strong as the above. This "half solution" is prepared in precisely the same way, using 2.5 c.c. of the phenolphthalein solution and 6.3 c.c. of the "saturated lime-water."

While this procedure does not give an exact volume of solution, it is believed to be the best for the preparation of this dilute test solution, since it obviates the necessity for pouring the prepared solution from the measuring-flask into the bottle in which it is kept; 12.6 c.c. of the stock lime solution is added rather than 10 c.c., in order to keep the values obtained with the resulting solution more nearly comparable with the older values calculated on the supposition that 10 c.c. of "saturated lime-water" was equivalent to 12.6 milligrams of carbon dioxide.

Method of Making the Test.—The "shaker," or apparatus for measuring the volume of air used, consists of a tube of about 30 cubic centimeters capacity, closed at one end, and graduated for a distance of 20 cubic centimeters from the closed end. In this tube, by means of a rubber collar, slides a smaller tube which is contracted at the outer end so as to be more readily closed by the finger. The apparatus is shown full size in Fig 5.

See that the inner tube of the shaker slides readily in the outer one, moistening the rubber collar slightly. if necessary. Have the inner tube pressed down to the bottom of the larger one, and measure into the apparatus 10 cubic centimeters of the test solution from the automatic pipette, or from a burette, as in Fig. 2. Pull the inner tube up to the 5-c.c. mark (the bottom of the inner tube serving as the index) and close the end of the tube with the finger. Hold the apparatus horizontally, and shake it vigorously for exactly 30 seconds.

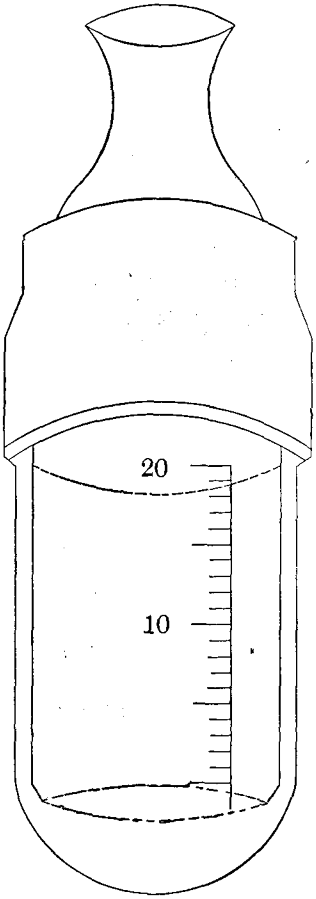

FIG. 5.—Fitz Shaker. Full Size.

The amount of air that is thus brought in contact with the solution is equivalent to approximately 30 cubic centimeters, as there are 25 cubic centimeters of air above the liquid when the small tube is forced to the bottom of the larger. Remove the finger, press down the small tube again to the bottom of the larger and draw it up to the 20-c.c. mark. Shake the apparatus again for 30 seconds. The amount of air brought in contact with the solution is now 30 + 20 = 50 c.c. Repeat the shaking, using 20 c.c. of fresh air each time, until the pink color is discharged. The amount of carbon dioxide corresponding to the number of cubic centimeters of air used will be found in Table A.

TABLE A.

Standard Test Solution. CO_2 in 10,000.	Cubic Centimeters of Air.	"Half Solution." CO_2 in 10,000.
22.2	50	15.6
18.0	70	12.4
15.1	90	10.2
13.0	110	8.7
11.3	130	7.5
9.9	150	6.6
8.8	170	5.8
8.0	190	5.2
7.3	210	4.8
6.8	230	4.5
6.3	250	4.3
5.9	270	4.1
5.6	290	3.95
5.4	310	3.8
5.1	330	3.7
4.8	350	3.6
4.7	370	
4.5	390	
4.4	410	
4.2	450	
4.0	490	
3.9	530	

Notes and Precautions.—Care should be taken that the finger used to close the end of the tube is perfectly clean, since on a warm day the free acid in the perspiration might easily vitiate the results. Some may find the use of a rubber stopper preferable.

If greater accuracy is desired, the shaker should be filled with the air to be tested before running in the test solution. This may be done readily by filling the shaker with water and emptying it, or by forcing air into the tube by means of a small rubber bulb.

The apparatus should be shaken vigorously and continuously during the 30 seconds in order to absorb practically all of the carbon dioxide in the enclosed air. The number of shakings ought not to be less than 100 during this time.

Care should be taken not to contaminate the air while the sample is being taken. The breath should be held momentarily while the air in the apparatus is being replaced, and the sample should be collected as far to one side of the body as possible. It ought not to require over 10 seconds to replace the air, and the entire test, with air containing, say, 8 parts of carbon dioxide per 10,000, should not require over 6 minutes.

If less than 90 c.c. of air is required to discharge the pink color, the test should be repeated, using 10 c.c. of air each time after the first 30 c.c.

It is not necessary to rinse out the shaker after making each test, but it should be carefully washed and dried after using, and the parts kept separate when not in use.

The "half solution" is used in exactly the same manner and amount as the regular test solution, reference being made to the appropriate portion of the table.

For the Cohen method the same solutions may be used and measured from the same apparatus. The samples are collected in white, glass-stoppered bottles of 1-liter capacity. This may be done by aspirating the air with a bellows as directed in the original method, or the bottles may be completely filled with water, which is then emptied at the place where the air is to be tested. Ten cubic centimeters of the test solution are run in from the automatic pipette, or from a burette as in Fig. 2, the time noted, and the bottle shaken continuously and vigorously with both hands until the pink color vanishes. It will aid materially in determining the exact point of disappearance of the color if a piece of white paper about 1½ inches by 3 inches is pasted on the side of the bottle near its lower edge, a similar piece joining it on the bottom of the bottle. In observing the color the solution is held in the angle formed by the pieces of paper, and

the disappearance of the color is more readily apparent. From the time required the amount of carbon dioxide in the air may be found by referring to Table B.

TABLE B.

Standard Solution. CO_2 in 10,000.	Time, Minutes and Seconds.	"Half Solution." CO_2 in 10,000.	Standard Solution. CO_2 in 10,000.	Time. Minutes and Seconds.
....	0.15	....	4.0	5.45
....	0.30	15.6	...	6.00
....	0.45	12.1	3.9	6.15
16.0	1.00	9.9	...	6.30
13.1	1.15	8.4	3.8	6.45
11.4	1.30	7.2	...	7.00
10.1	1.45	6.3	...	7.15
9.1	2.00	5.5	3.7	7.30
8.3	2.15	4.9		
7.6	2.30	4.4		
7.0	2.45	4.0		
6.5	3.00	3.8		
6.1	3.15	3.7		
5.7	3.30	3.6		
5.4	3.45			
5.1	4.00			
4.9	4.15			
4.7	4.30			
4.5	4.45			
4.3	5.00			
4.2	5.15			
4.1	5.30			

Carbon Monoxide.—The detection and estimation of carbon monoxide in the very minute quantities in which it is found in the air of ordinary rooms is a problem of considerable difficulty.

Detection.—Probably the most convenient test for detecting small quantities is the blood test. Dilute a large drop of human blood, freshly drawn by pricking the finger, to 10 c.c. with water. Divide the solution into two equal portions, and shake one portion gently for ten minutes in a bottle containing about 100 c.c. of the air to be tested. Compare the tints of the two portions by holding them against a well-

lighted white surface. The presence of carbon monoxide is indicated by the appearance of a pink tint in the blood which has been shaken with air. One part in 10,000 can be detected in this way.* The delicacy of the test can be increased by examining the blood, after shaking with the air, with a spectroscope. By collecting the sample in an 8-liter bottle and examining it in this way 0.01 part in 10,000 may be detected.

Determination.† — *Principle.* — Oxidation of the carbon monoxide to carbon dioxide by iodine pentoxide, iodine being liberated according to the following equation:

$$I_2O_5 + 5CO = I_2 + 5CO_2.$$

The iodine is titrated with $\frac{N}{1000}$ sodium thiosulphate.

Directions.—Place 25 grams of iodine pentoxide, free from iodine, in a small U tube which is suspended in an oil-bath and connected with a small absorption-bulb containing 0.5 gram of potassium iodide dissolved in 5 c.c. of water. Heat the oil-bath to 150° C., and pass the air, previously drawn through U tubes,—one containing sulphuric acid and the other solid potassium hydroxide,—through the apparatus at the rate of a liter in two hours. Titrate the liberated iodine by $\frac{N}{1000}$ sodium thiosulphate and starch.

Notes.—The temperature and barometric pressure should be noted and all volumes reduced to 0° C. and 760 mm. pressure.

Using 1000 c.c. of air, it is possible to determine in this way 0.25 part per 10,000, by volume, of carbon monoxide.

---

* Clowes: "Detection and Estimation of Inflammable Gas and Vapor in the Air," p. 138.

† Kinnicutt and Sanford: *Jour. Am. Chem. Soc.*, **22** (*1900*), 14.

The use of tubes containing sulphuric acid and potassium hydroxide is to free the air from unsaturated hydrocarbons, hydrogen sulphide, sulphur dioxide, and similar reducing gases.

Nitrites.—The determination of the amount of nitrites or nitrous acid in the air can be readily made as follows: Collect a sample of the air in a calibrated eight-liter bottle, as in the determination of carbon dioxide. Add 100 c.c. of approximately $\frac{N}{50}$ sodium hydroxide solution. (This should be free from nitrites and is best made by dissolving metallic sodium in redistilled water.) Shake the bottle occasionally and let it stand for about twenty-four hours. Take out 50 c.c. of the solution and determine the amount of nitrites as directed on page 106.

Micro-organisms.—For the quantitative determination of the number and distribution of the micro-organisms in air, the method employed by Tucker * in the examination of the air of the Boston City Hospital answers very well. The apparatus used consists essentially of three parts: (1) a special glass tube called the *aerobioscope*, in which is placed the filtering material; (2) a stout copper cylinder of about sixteen liters capacity, fitted with a vacuum-gauge; (3) an air-pump. The filtering medium which is used to retain the micro-organisms is a narrow column of sterilized granulated sugar about four inches long.

In using the apparatus, the required amount of air is first drawn from the cylinder by means of the air-pump. A sterilized *aerobioscope* is then attached to the cylinder and the air is slowly drawn through it, leaving its germs in the sugar-

* Report State Board of Health, Mass., 1889, 161.

filter. After the air has been drawn through, the *aerobioscope* is taken to the culture-room and the sugar dissolved in melted sterilized nutrient gelatine. The gelatine is congealed in an even film on the inside of the tube, where, after four or five days, the colonies will develop, and can be counted by the aid of squares engraved upon the glass.

This method possesses several peculiar advantages. The use of a vacuous cylinder allows a known volume of air to be readily aspirated, and the rate of flow through the filter is easily controlled. Another great advantage is the use of a soluble filter (sterilized granulated sugar), since insoluble substances seriously interfere with the counting. Furthermore, the removal or transference of the filter and its germs is avoided. The apparatus is portable, and the method, as compared with others, is exceedingly rapid of execution.

Organic Matter.—In regard to the presence of organic matter in the air there is at present considerable variance of opinion. While some investigators have obtained results which indicate the presence of such organic matter, it has been found also that the amount which is obtained is very much less when the dust of the air is first removed by filtration. The quantity of organic matter is therefore closely related to the amount of dust, and there is strong evidence that this dust in the air is the source of the greater part, if not all, of the organic matter, unless there are present persons with decayed teeth, diseased lungs, etc.

The methods of determination that are in general use may be divided into two groups. In the first group are those methods in which the organic matter is converted into ammonia and determined by Nessler's reagent. In the second group the organic matter is oxidized by boiling with dilute potassium permanganate, the excess being titrated

with oxalic acid. No one method gives results which are wholly satisfactory, the chief difficulties being to secure an absorbing material which shall itself be free from organic matter, and to avoid the introduction of minute particles of organic matter or dust during the analytical process.

Remsen * and Bergey † recommend the use of freshly ignited granular pumice-stone contained in a narrow glass absorption-tube. After aspirating a known volume of air, the pumice-stone is transferred to a flask, the ammonia distilled off from alkaline permanganate and estimated by Nessler's reagent. Experience with the method in this laboratory has shown that it is practically impossible to prepare the pumice-stone so that it shall be absolutely free from organic matter, and that the mere act of transference of the absorbing material resulted in a considerable error. Miss Talbot ‡ found, furthermore, that all of the organic matter is not converted into ammonia by a single distillation, but that a second and third redistillation of the distillates uniformly gave higher results. She found it preferable to draw the air directly through the boiling permanganate, having the apparatus so arranged that the condensed steam was returned to the flask. In this way the particles of organic matter were returned again and again to be acted upon by the permanganate.

Experience with all these methods is well summed up by Professor Remsen when he says: "It would be useless to have examinations of air made by any but the most careful workers. It would be time thrown away to have such analyses made by the average practical chemist."

* National Bd. Health Bulletin, I, 233; II, 517.

† Mis. Coll. of Smithsonian Institution, No. 1037 (*1896*).

‡ *Tech. Quart.*, 1 (*1887*), 29.

Dust and Soot.—The dust in the air may be estimated by drawing a measured volume through tubes packed with cotton and noting the increase in weight. Soot may be determined by drawing the air through combustion-tubing partly filled with ignited asbestos, and then determining the carbon by the ordinary methods of combustion.

CHAPTER V.

WATER: ITS SOURCE, PROPERTIES, AND RELATION TO LIFE AND HEALTH.

(*From the Householder's Standpoint.*)

THE metabolism which produces human energy is dependent upon the presence of water in the tissues. This water is derived in part from food which, as eaten, contains from 30 to 95 per cent.; in part from boiled water, as in tea and coffee; or raw from well or city tap. The total daily supply per person for this purpose from all sources is five or six pints.

Water is also necessary to all forms of vegetable and animal life, even the lowest types, including those inimical to human health. Man has always used water as his beast of burden: to carry ships to the ocean, to turn mill-wheels, to generate electrical power. He has also forced it to be his scavenger, carrying the refuse of his activities out of his sight. Unless compelled by legal restrictions, he has given little thought to the effect on his neighbor of this treatment of their common property.

In common law, water is held to be a gift of nature to man for use by all, and therefore not to be diverted from its natural channels for the pleasure or profit of any one to the exclusion of the rest. Neither has one the right to return to the channel water unfit for the use of his neighbor farther down the stream. That is, there is no private ownership in

surface-waters flowing in natural channels. But this interpretation of eminent jurists has not always been strictly followed. Many cases have been decided, especially since the rapid growth of large cities, in direct contradiction to this law. As population increases, cities need to go farther and farther into the country for their water-supply, and they often take from the few settlers found there the right to the water which passes their doors, for the benefit of far-away thousands.

The law in regard to that portion which never enters, or which escapes from visible channels, is less clear. It is usually held that this water goes with the soil, and that rights to it may be bought and sold: that wells may be driven and drains dug, even if a neighbor's supply is cut off; but it is always maintained that no man has a right to place any substances on or in the ground which shall render his neighbor's well unfit for use.

The changes in conditions of life have rendered imperative a careful study of the ways and means of practically complying with the law's demand without a serious restraint upon the progress of civilization.

The daily quantity required for each person has increased from the two to four gallons drawn by bucket from the farmhouse well to thirty or forty gallons taken from the town supply by the turning of a faucet, and in cities where much is used for manufacturing purposes, for running elevators and motors, the daily amount may reach 100 gallons per inhabitant. This constantly increasing use of water for other than cleansing purposes has enormously increased the difficulty of securing clean water for domestic use. Not only is a larger quantity of polluting material deposited in the water, but it is carried farther from its source by the dilution. This fact, as well as the demand for higher standards of

purity, has made the abandonment of private water-supplies a necessity, and has demanded from municipalities the best scientific knowledge and the most careful supervision of the quality of the public supply.

A city or town is under as strict obligation to furnish a safe supply of water as it is to provide safe roads. To this end, the proper construction and maintenance of reservoirs and a sufficient police surveillance of the watershed is as important as abundance of supply.

Education of the people at large is still necessary, not only that those who depend in whole or in part upon springs and wells may know how to protect themselves, but also that the necessary cost of the larger public (municipal) supply may be cheerfully paid for by the citizens.

Leaving out of the present discussion such considerations as belong only to the engineer and specialist, the problem of potable water will be treated in this chapter from the point of view of the intelligent citizen and educated individual who cannot afford to remain ignorant of so important a factor in the general welfare. The reason why this education is needed lies in the fact that primitive habits of thought, influencing action in every-day life, survive long after the race has passed beyond the original conditions. In no respect is this more true than in regard to water.

The ideal drinking-water of most persons is the clear, colorless, sparkling water of a spring, refreshing in its coolness and satisfying the æsthetic sense by its suggestion of purity. So strong a hold has this ideal that it is most difficult to convince the average person that any water which has these characteristics can be other than wholesome and, conversely, that water lacking in any of these qualities is suitable for human consumption. Early man drank clear cool water

wherever he found it. If there was not a spring at hand, he scooped out a hole in the sand. Pioneer settlers dug the well as near the kitchen door or the barnyard as they could find water, with a blind faith in the protecting power of mother earth, not wholly misplaced so long as the requirements of the household did not exceed two or three gallons per person daily, and so long as the nearest neighbor was half a mile away. So persistent is this confidence in nature that in the light of this day a majority of intelligent people, even, will quaff at a roadside well or drink freely at a country hotel or go to live in a city without ever taking thought for the quality of the water. Water is water, and he who pauses with his glass half-way and asks whence comes the supply is scouted as a weak-minded crank. So, too, when town authorities have spared no pains or expense to secure a safe supply from a distant lake, and have guarded it by all means known to science, the primitive habit of thought requiring colorless water of an even coolness of temperature leads those who can afford it to purchase "spring"-water in jugs and bottles, with the blind faith of the savage that what comes out of the ground must be good.

Fundamental race-habits are taken advantage of by the dealer in spring-waters as well as by the vendor of patent medicines—the missionary has no chance against him. From the schools and colleges there should, however, be sent out a generation of more intelligent persons who, learning to weigh evidence, will not take chances and will help to develop a public opinion on sanitary matters, especially in regard to water-supplies. For not until there is an intelligent public can the present reckless use of water and ground be stopped. While not every man may be a chemist, he can have that modicum of knowledge which will enable him to understand the need of chemical tests of

water and to distinguish between the work of the expert and the amateur.

However safe this ideal of clear, colorless water may have been in early times, it must now be relegated, with the unbarred door and unwatched treasure, to the mountain fastnesses. As the country becomes settled, appearance and taste are no longer sufficient guides; therefore scientific tests must be applied and the results interpreted by trained observers to whom the individual subordinates his private judgment.

The ideal water should be above suspicion, for if it has once been contaminated, who can tell how soon it will find bad company again? Not the analyst in his laboratory. In fact, the laboratory verdict is worth very little without a knowledge of outside conditions and without a keen detective insight which scents out the most unlikely causes. Nevertheless the evidence given by analytical results is needed to procure conviction.

Although "pure" water is found only in the laboratory, "safe" water, that which is reasonably free from objectionable substances, mineral and organic, may be obtained with sufficient care and knowledge.

A clear understanding of the problem requires a close study of the circulation of water on the earth. Let us trace the course of water from sky to ocean, in view of its availability for domestic use, and note the dangerous properties it may acquire, considering also the changes in condition which it may undergo in its course from mountain to sea.

Water-vapor rising from sea and land is condensed in the upper air, then falls to the earth, absorbing, as it does so, ammonia, carbon dioxide, sulphur oxides, and other soluble gases, if present, and washing the air free from dust-particles, mineral and organic.

This meteoric water (rain or snow), although nearly free from dissolved mineral substances, is therefore by no means pure. Furthermore, rain falling on insoluble rocks, bare or lichen-covered, or on loose, sandy soils, washes them also, giving up to the vegetation the ammonia and taking in return carbon dioxide and dissolved albuminoid ammonia.

Water thus enriched has increased solvent power on certain rocks and soils. This rain-water soon forms rivulets which, passing down from the highlands into the forest, spread over the moss-covered area, soaking the leaves and peaty soil and extracting organic substances. Mountain brooks, as well as lowland streams, draining a region free from limestone, are thus colored brownish-yellow and furnish "meadow-tea," as Thoreau happily named it. As the stream flows on it receives contributions of many kinds—the overflow of springs, the under-drainage from cultivated fields, the surface-wash from pasture and meadow. Scavengers are, however, constantly at work. Brought as dust by the ever-passing air-currents, seeds of tiny plants freely sprout in the water and grow rapidly whenever a quiet pool or lake gives opportunity. The products of organic decay and the ammonia of the rain may be thus removed and the water pass on to the reservoir clear and soft and as nearly pure as nature furnishes. It is, however, becoming rare to find even a mountain stream or forest brook which has not been subjected to modification by human agencies. Three kinds of contamination may take place. First: A farmhouse high up on the hillside lays tribute for drinking purposes upon that water finding its way beneath the sand which appears in the form of a spring. The overflow is made into a duck-pond, or passes through the watering-trough by the roadside before it joins other water tumbling over the rocks as a rapid stream. The brook thus grown larger widens out a little below the farmhouse into a

shallow pool, in which one or two cows frequently seek comfort. The water has become rich in organic matter and supports a thick growth of tiny plants; the stones, even, may be coated with green slime. This vegetation serves as a warning to the hunter and the woodsman, who wisely drink only of water from clear pools with bottom of shining sand. The heavy material stirred up by the cattle soon settles, leaving the water in the stream below clear, although probably a little yellow in color. It still tastes well and looks all right, and may be used by human beings with probable impunity.

Second: The little stream next passes other farm buildings, where the privy is put over it to save the trouble of cleaning, or, even if not so close, is placed in such a way as to allow of a possible wash into it, especially in times of sudden rain.

A case of typhoid fever develops at this farm. No precaution is taken to disinfect the discharges, and a portion of the dangerous material is carried into and along with the water. Some two or three miles below, another farmhouse, having no spring, uses this same little stream for its supply, perhaps damming it up into a little pond or pumping it into a tank. All unconscious of what has happened above, or ignorant of consequences, this water with a history is freely used, and perhaps the whole family come down with the disease, perhaps only the delicate one may have it. It may be that they will all escape, owing to the fact that they were particularly robust, or that they drank no water raw, or that the conditions on the stream have been favorable to purification of the water by storage and consequent growth of the green plants, which are our friends in such cases; but if the water were pumped into a covered tank and used soon after, the chances are nine to one that some deleterious results followed.

in undecomposed vegetable or animal substances. As soon as dead, these substances may become food for micro-organisms and the nitrogen then appears in a form from which it can be obtained as ammonia; for instance, from decaying beans, from putrefying broth, and from fresh sewage. This process takes place with or without much air and may be accompanied by very bad odors. As soon, however, as the nitrogen has passed from the insoluble organic form into the soluble compounds from which ammonia is obtained, then, if oxygen is present, and only then, another set of micro-organisms take up the work and nitrites appear; when still another set have done their work the nitrogen is found only in combination as nitrates, fully oxidized and mineralized, no longer organic or capable of sustaining the life of the lower forms of vegetation, but, on the other hand, the most valuable food for chlorophyll-bearing plants which convert nitrates again into organic nitrogen. This cycle may be arrested or broken at certain stages. If the soluble ammonia compounds are set free out of contact with air or below the layers of soil containing the nitrifying organisms, they may remain indefinitely unchanged. If nitrates have been carried below the reach of the roots of the chlorophyll-bearing plants, or if they are confined in a space deficient in oxygen, then an access of decomposable organic matter with micro-organisms will cause a reduction of the nitrates to nitrites and free nitrogen, through the action of these lower plants which, in the absence of air, take the little oxygen they need from mineral compounds.

These micro-organisms are not the only ones at work, however. In any sudden prominence of one factor others are apt to be overlooked; thus in the present case the infinitely small has so powerfully affected men's minds that, partly because the micro-organisms are beyond their range

of vision, such forms of life as are evident to the naked eye or with low powers of the microscope have been overlooked to an extent.

As agents of putrefaction and of decay the micro-organisms have their work to do, but the final purification—the finishing up of the work—belongs to another order of life. The still minute but visible green plants—those which float free in water or attach themselves to larger growths—have now their part to play. The life-history of these forms has been little studied, and the work they do in the actual purifying of polluted water has been almost overlooked. The impression left on reading most books is that when foul matter has been dissolved and converted into ammonia, carbon dioxide, and nitrates the work is done, but these compounds only furnish food for the next class, and these again for infusoria, tiny crustaceans, etc.

In some cases these organisms succeed each other with great rapidity; in one case the fauna and flora of a given pond varied each week of a season, certain rare forms being found only once.

There is needed, almost more than anything else, a consecutive study of the green plants found in water-supplies, since by their cultivation greater purity might be attained and possibly a way might be found of exterminating the disagreeable ones. The most unexpected results may follow the long study of a single organism, such as has been given to *Oscillaria prolifica* of Jamaica Pond for a period of fifteen years. Weekly, sometimes daily, observations have been made for several years.*

It is organisms of this class which give tastes and odors to water, and which, if enough were known concerning them,

* *Trans. A. A. A. S.*, 1898. *Technology Quarterly*, 14 (*1901*), 302; 15 (*1902*), 308.

would probably give perfectly trustworthy evidence as to the past history or source of contamination.

The two classes of organisms work in opposite directions, and so long as food is present for either, life will increase with proportional rapidity. This connection of cause and effect should be made familiar to the intelligent citizen. When a ground-water free from all organic matter but rich in nitrates is exposed in an open basin the rich growth of chlorophyll-bearing algæ follows as a matter of course; later, decay sets in and products of decomposition abound, the air above being the source of a constant supply of spores of all kinds.

When a house- or barn-drain empties into a small sluggish stream, it soon becomes filled with green plants thriving on the ammonia, and it is often possible to trace the source of pollution of a large lake by the line of green anabæna leading to the insignificant ditch.

A curious blindness on the part of managers of waterworks to the movements of water and its action in transporting material is seen not only in the almost universal proximity of cemeteries to reservoirs, but also in the common practice of dressing the sloping banks of turf with a heavy coating of manure. Even if this was derived from clean stables and was not liable to be contaminated with night-soil, the abundant food for plants which inevitably finds its way into the reservoir occasions as fruitful results in the water as on the banks, and is undoubtedly the cause of much of the trouble in storage basins.

It is evident, therefore, that a once polluted water cannot be said to be purified so long as food for green plants remains, for the moment the temperature and other conditions become favorable growth will begin. The term "purification," taken in a chemical sense, should not be loosely used

Complete purification can take place only when all traces of former impurity, in any form, have been removed. Chemical precipitation of sewage leaves the soluble ammonia, and sand filtration leaves nitrates to serve for abundant life and subsequent decay in the streams into which the effluents flow. Such effluents are *clarified* and the organic matter may have been mineralized, but this is not *purified* water. Only when growing plants have removed this food and have themselves been removed can the water approach a purified condition.

The effect of storage of water containing high nitrates in open tanks or reservoirs exposed to the collection of dust will be that spores of chlorophyll-bearing algæ, diatoms, desmids, etc., will soon develop and will increase as long as the food (nitrates, mineral matter, etc.) lasts. Only by protection from dust and light can such water be kept free from unpleasant accumulations of suspended organisms or from disagreeable tastes. Unpolluted surface-waters, on the other hand, improve on storage, as a general rule, if the basin is a clean one. The storage of polluted or clarified water is thus forbidden, since not infrequently the first indication of the pollution of a surface supply is given by the appearance of some member of that richly nitrogenous group of algæ called *cyanophyceæ*, or "*blue-greens*," from the presence of blue or purple coloring matter along with the yellow-green chlorophyll. Since this group of plants contains from seven to eleven per cent. of nitrogen, while other groups contain only one or two, it is evident that, if it is to flourish, more nitrogenous food must be supplied. This may be derived from fertilized fields, from decay of other vegetable life, as well as from the richer source of direct sewage; but, in any case, the growth of these plants is a sign of abundant food-supply which must be cut off if they are to be starved out, as they must be unless they are removed while fresh by strain-

ing or skimming, for the odor of their decay is so intolerable as to preclude the use of the water. In some cases the odor accompanying their growth renders the water quite objectionable, and neither natural nor artificial filtration is able to remove it.

Either natural or artificial basins may have a collection of vegetable matter on the bottom which slowly decomposes in summer, and since the bottom water is colder, the resulting ammonia remains until the late fall overturn, when it is brought to the surface, where it favors the growth of diatoms and other cold-water plants. Certain diatoms, as asterionella, cause disagreeable odors. Such basins show the least ammonia in early October and the most in late November.

In order to make any predictions as to the probable development of this flora and fauna of water, experience and at least a year's watching of any given supply are required until more is known of the life-history of these forms of life. Nothing is more needed to-day than work along these lines. When may disagreeable odors and tastes be expected? What precaution or measures may be taken in each case to prevent them? These are the questions the water-works superintendent, equally with the consumer, is asking, for the most part vainly as yet.

As has been stated, surface-waters often carry stable organic matter in connection with color, so that while the organic nitrogen shows high, no free ammonia or nitrates are formed on standing. These weak meadow-teas are now largely used for town supplies, and a word as to the source of the color may not be amiss. Many carbonaceous substances, sugar, for example, when partially broken up become caramelized and give a brown solution, the color being due to substances richer in carbon; this color is deeper as the decomposition is more complete. There is no reason to sup-

pose that such compounds have any deleterious effect on health. Indeed, experience has proved that such waters are more reliable than many others.

The chlorine of unpolluted natural waters is derived from the sea in past or present times. Waves breaking on a rocky shore send finely divided salt-spray high into the air; dust-particles becoming coated with it carry their burden of salt around the world. The rain brings to earth now more, now less of this salted dust, each region receiving in the course of the year an amount fairly proportional to its distance from the seacoast and to the rainfall. No mountain lake or stream has yet been found free from this element. Where evaporation and rainfall nearly balance, the normal chlorine will be that of the rain for the year, but where evaporation is in excess it may exceed that for any given year. In the absence of salt-springs and industries using much salt, the source of chlorine in excess of the normal is the domestic life of man. Mr. F. P. Stearns has estimated that the chlorine in the annual drainage of any watershed is increased one-tenth part per million by 20 inhabitants per square mile.

Chlorine may serve to prove not only the presence but the amount of sewage pollution in any case where the other factors are known. Otherwise chlorine has no sanitary significance.

Of the mineral constituents in waters there is little to say except that, like climate, water is to be taken as it is found—hard, high in mineral matters if derived from a limestone region, soft if from archean formations. Physicians are not agreed as to the effects of hard water, or of the brown soft waters.

Fortunately the human system possesses remarkable adaptability, so that if slowly accustomed to a given condition, as we have seen in the case of air, and as we shall have

occasion to remark when food is considered, it can safely bear what would be a serious shock if suddenly encountered from an opposite condition. Natives of a hard-water region are made ill on coming to a soft-water region, and *vice versa*. Inhabitants of a city with a polluted water-supply seem to acquire a certain immunity.

The safety from organic contamination secured by the use of distilled water has brought up the question of a possible danger in too little mineral contents for the best cellular interchange wherein lies life.

With the superabundance of mineral salts in ordinary diet, there would seem to be little cause for alarm; but if the food were poor in these substances, it is quite conceivable that evil results might follow a free use of distilled water.

A word as to the care of water in the house may not seem amiss, in view of the tendency it has to absorb gases, to collect dust, to favor chemical and vital changes, to dissolve metals.

Too great care cannot be taken in all these directions to secure water freshly drawn from the main pipe beyond the lead or brass house-pipes and to avoid those traps for the unwary householders—faucet filters.

When the water-supply is safe, but warm and flat to the taste, ice is frequently used to cool it.

Much has been said about the dangers of ice when used in drinking-water and on or about food. The latter is probably the most serious danger, since people are not so careful about the quality of ice for that purpose.

Certain rules may be broadly stated as guides to the householder:

Crystal-clear ice, free from crevices, bubbles, etc., is probably pure, for it has been formed from slow freezing in a thin layer, over a deep mass of water, as 20 to 30 inches of

ice in a pond 40 or 60 feet deep. In this case the impurities have been excluded. This crystal ice is impermeable to air and therefore to what air carries, and of course to water and what it carries.

An equally safe rule is to discard all "snow-ice" made from snow saturated with water.

The increasing difficulty of obtaining safe water has caused an increasing use of distilled water obtained either from domestic stills or in bottles or carboys from manufacturers. The latter is often a desirable source of drinking-water if the glass does not scale off from the bottles. A very little common salt may be added if the consumer prefers, or even a drop or two of the druggists' "lime-water."

The domestic still, if made from a poor quality of metal, may bring an evil second only to that of polluted water. Lead should not enter into its construction.

CHAPTER VI.

THE PROBLEM OF SAFE AND ACCEPTABLE WATER AND THE INTERPRETATION OF ANALYSES.

(*From the Chemist's Standpoint.*)

FROM what has been said it will be evident that the problem of safe water for domestic use is not so much concerned with the water itself as with its property as a carrier and its part in chemical changes.

We have seen how a great variety of vegetable and animal matter finds its way into the water of a settled region; and as it is constantly being transformed from one form to another by the agency of multitudes of organisms, it is evident that the exigencies of modern life render impossible the exclusive use of water of great organic purity. It is useless, therefore, to fight over again the battles of the past as to the source and kind of "organic matter" in water.

We have also seen that it is not the mere presence of compounds of carbon, hydrogen, and nitrogen in drinking-water which gives the element of danger. It is not even the fact that these have taken part in animal life; fish and frogs continually die in ponds and streams, to say nothing of countless cyclops and mosquito larvæ. Well authenticated cases are on record in which one drink of a polluted water has proved fatal; while, on the other hand, it is equally sure that highly contaminated water has been used with apparent impunity.

When water has received excreta of diseased human beings, disease-germs are very likely to be conveyed by it to other human beings. In a city there are always cases of disease, therefore all city sewage is to be considered dangerous. But besides the living germs there are other accompaniments of decaying organic matter which, when in concentrated form, sometimes show toxic properties. Certain facts and many conjectures lead to the conclusion that a water is " safe " only when free from *decaying* substances.

Along with the millions of harmless micro-organisms engaged in the work of conversion there may be a few score inimical to the health of man, and for the education of the still skeptical public it is often advisable to speak somewhat strongly of the possible dangers from water-borne disease-germs.

Nitrogen as the Essential Element in Living Matter.—All organisms from the lowest to the highest thrive only in the presence of food; therefore only that organic matter which serves to support life or which, as a product of life, may be deleterious to man is rightly to be held as dangerous. The element common to both kinds is nitrogen; therefore the water-analyst seeks evidence not only of its presence or absence, but of the forms in which it is found and their relation to one another. It may be assumed that any water which shows no change in the relative amount of its nitrogenous compounds at the end of a week either does not contain the organisms necessary to effect this change or is wanting in the food upon which they can thrive. As, however, it is inconvenient to wait a week before deciding this point, other methods are used. The so-called albuminoid ammonia is supposed to indicate the amount of decomposable nitrogenous matter, but, as a matter of fact, taken by itself it gives little information of value. While its absence is conclusive,

its presence is not equally so; but a proof of its *variability* from day to day is really valuable. Whether used in the final interpretation or not, "organic nitrogen" (or that portion of it appearing as albuminoid ammonia) is always determined, together with the other forms, as soon as the sample is received.

A nitrogenous organic compound is dangerous from one of two causes: first, because it is already decaying and harbors pathogenic germs or is giving off toxines; or, second, because it will furnish food for a further development of bacterial life.

As to its derivation from animal or from vegetable matter, there need be little discussion, especially since the recognition of the high nitrogenous content of the blue-green algæ and the nitrogenous character of "soil-humus" and the close approximation of animal and vegetable protoplasm. But it is most important to know if it is *stable*, since one of the best aphorisms ever contributed to the literature of water-analysis is given by Dr. Drown's statement, "A state of change is a state of danger."

Results of the Decay of Nitrogenous Organic Matter.—The products of the first stage of decay of this class of organic matter are carbon dioxide and ammonia. It is to the latter that we turn for the proofs sought, by reason of the methods at hand for detecting such small amounts as one part in a billion parts of water, and because it is for the nitrogen compound that we seek.

The mere presence of free ammonia is not a sufficient indication of recent pollution from human sources. Rain-water, as shown in Table III, contains considerable quantities; decaying blue-green algæ furnish it in still larger amounts, and moreover it offers acceptable food to plant-life and may therefore disappear in the form of combined nitrogen.

Nevertheless, it is to be held as one of the chief witnesses, for it is found in sewage in a thousand times the quantity in which it occurs in ordinary potable water. While putrefactive decay takes place by stages, the lines of division are not sharply drawn, and nitrites, the result of the second stage, may be and usually are found in polluted waters together with ammonia. So frequently is this the case that it is considered circumstantial evidence sufficient to convict when both ammonia and nitrites are found together. (See Tables V and VI, p. 227.)

The reason is not far to seek. Both are not only products of decay, but both are in that unstable condition which indicates active processes, and which therefore means the presence of micro-organisms. Certain exceptions will be noted later.

The fourth form of nitrogen, that found in nitrates, is no longer classed as organic; it is now become food for green plants and cannot nourish the class to which bacteria and pathogenic germs belong, hence it is fair to presume that for lack of food the latter have succumbed or have been otherwise removed. The value of this test is the proof it *sometimes* furnishes of previous sewage pollution, since the nitrogen present in excess of that brought down by rain must have been furnished either by fertilizers, by decaying matter, or by sewage. (See Tables V and VI, p. 227.)

Organic Carbon.—Since by far the largest constituent of organic matter is carbon, some fifty per cent., it might seem as if this was the best indication of pollution. Indeed, it was formerly so considered, and many methods have been devised to show its presence quantitatively. As our knowledge of the slight differences between many forms of animal and vegetable substances grows, the probability of any conclusive evidence from this source, either as to past history or present

condition, decreases. In short, although for many yea
water-analysts have been striving to perfect methods of d
tecting certain substances and certain organisms, it woul
seem as if they were no nearer a discovery of one simple de
cisive test, but, in most cases, were driven to a somewha
elaborate examination in which one test only furnishes one
link in the chain of evidence.

Sanitary Analysis.—The examination of a water to determine its safety for domestic use is called a sanitary analysis, in distinction from that examination which determines its fitness for manufacturing purposes, for use in steam-boilers, or its medicinal value.

Four points are to be determined: First, the amount, if any, of organic matter in a living or dead condition, suspended or dissolved in the water; second, the amount and character of the products of decomposition of organic matter, and their relative proportions to one another; third, the stability of the undecomposed organic substances; fourth, the amount of certain mineral substances dissolved. From these results we draw conclusions as to the present condition and past history of the water. These conclusions are not infallible, but there are enough unavoidable risks in human life without taking unnecessary ones; and if pollution is proved, the cause should be removed or the supply abandoned.

Preliminary Inspection.—So long as the eye can re-enforce
e other tests and the whole course of the water may be
early traced, it is comparatively easy to judge of the charac-
r of a supply and of its safety for human use; but when a
le in the ground is the visible source, or the actual history
the water is hidden in unknown distances and depths, the
gnosis is more difficult.

First, the geological horizon and superficial soil must be

studied; the direction and flow of underground water, not the slope of the surface only; the possible sources of danger, occasional as well as constant, within at least a quarter of a mile radius. The composition of unpolluted water of the same region should always be at hand for consultation.

Safe Water.—As has been said, we can no longer require *pure* water; the most that we can demand is that the supply shall be *safe*. To the uninitiated one sample of clear, colorless water seems very like any other. The safe, colored or muddy water of a stream or pond seems less desirable than the clear, cold water of a badly polluted well.

A water may be normally safe and yet, from exceptional circumstances, be for a time a source of danger. In one case the mouth of a well at a factory was overflowed by a contaminated brook raised above its usual level by a heavy shower for half an hour only. Some thirty cases of typhoid fever resulted, so close to one another and so suddenly ceasing as to leave no doubt of the fact that for only a few hours was the water unsafe. How, then, shall a chemist tell if at some past time a water may have been or at some future time may become a source of disease? Only by carefully weighing all the testimony attainable—ocular, chemical, biological, bacteriological—in the light of past experience.

The day of the vest-pocket sample, usually in a flavoring-extract bottle, cork and all, is nearly past, but that of the fruit-jar, with a sticky rubber ring and corroded zinc top, is still with us. That admiration for chemical knowledge and belief in chemical clairvoyance which expects the chemist to decide from a sample while you wait if a certain water caused the death of a person a month since in a distant town under unknown conditions is very trying to the man who knows his own limitations.

The market value of an analysis cannot well be appre-

ciated until a juster estimate of the professional training of the analyst is a part of common knowledge.

Safe and Acceptable Water.—It is not enough that a supply shall be free to-day from disease-germs; it should remain free from changes for a reasonable period of time. Therefore the advice desired by the towns seeking for supplies implies much more than mere analysis; it includes estimates of future changes, of variations due to possible further developments, and of the effect of these variations on *acceptability* as well as safety.

To be fully *acceptable*, a water should be free from color, odor, turbidity, sediment, and of a uniform temperature so low as to admit of use without ice. Only such water as has been earth-filtered and earth-cooled can meet this demand, but the supply of this class is becoming drawn upon to its limit; besides there are difficulties in the conveyance and storage of ground-water which offset many of its advantages.

From the foregoing paragraphs it will be seen not only that waters carry every possible degree of safety or danger according to the country they drain, the number and habits of the people living on the watershed, and the presence or absence of factories, slaughter-houses, etc., but that many elements enter into the judgment of a water-supply, and how different these elements are in different waters. Safe water is that which carries neither seeds of disease nor such substances as are deleterious in any way to mankind in general.

A brown water may yield 20 parts per million organic matter and show 10 parts oxygen consumed, and yet be a safe and wholesome water. A ground-water may show 5 parts nitrates, and yet for ten or twenty years prove a safe supply.

Since, however, water is so universally made a carrier of refuse, it is difficult to find a stream or well which fulfils the

above exacting requirements, and a compromise is made which sets certain arbitrary limits and so keeps the chances small. Such limits are very misleading of themselves, especially if used over a wide extent of territory. The English standards, for instance, are not applicable to eastern North America. Only a study of all local conditions and a wise interpretation of all results can make standard figures of any significance. This is true, also, of bacterial results in surface-waters. In the natural condition of lakes and streams there are so many varieties of bacteria present and in such varying numbers, according to wind and rain and watershed, that taken alone the numerical count gives no more convincing proof than is found in chemical figures.

While it is quite within the limits of possibility that a culture-tube of typhoid bacilli might be emptied into the middle of a river or be washed into a reservoir, and chemical analysis give no sign, yet no continuous natural means of contamination is known which is not accompanied by substances readily detected by suitable chemical examination. In either case an epidemic may or may not result, dependent upon causes other than the mere presence or absence of the micro-organisms.

If drainage from a house or barn is seen entering a stream, it does not need a dozen plate-cultures to prove that there is possible danger. Such tests may, however, when used with skill, serve to trace contamination back to its source, and is another means at the service of the trained water-works superintendent whereby he can keep a close watch over the character of his supply.

As a means of control of the efficiency of filter-plants the bacterial examination is invaluable, and as a knowledge of the forms which accompany pathogenic germs becomes more certain the value of these tests will increase, even if the

classification and identification is not perfected to scientific accuracy.

It is one of the penalties of living in a large city that the water-supply must of necessity be surface-water which has been caught and stored at a distance or that which has been filched from a stream, filtered and made passable. Consequently education must take the place of instinct, and custom must make that acceptable which circumstances render necessary.

THE INTERPRETATION OF ANALYSES.

Experience in cutting through glacial moraines for railways or in driving levels for mining operations does not qualify a man for exploration of a Babylonian or prehistoric mound. Human occupations have left upon the sand and clay evidences which, although so slight as to be unnoticed by the casual observer, are like an open book to him who patiently acquires a knowledge of the meaning of the displacements, discolorations, and enclosed fragments. Flowing water, like sand and clay strata, bears evidences of its previous history no less intelligible to him who has the key to the cipher and who adds to the keen eye of the detective and ready wit of the interpreter the sound judgment of the engineer. Reasoning upon insufficient premises will as often fail in the one case as in the other, while lucky guesses frequently encourage superficiality in both.

After the analyst has entered on the blank (page 138) the six to ten records needed for a ground-water, or the fifteen to twenty for a surface-water; after the columns headed Bacteria, Diatoms, Algæ, etc., have been filled in, there still remains the summing up of the case by the judge. The correct interpretation of results means a knowledge of the source, geological horizon, surroundings, probable

changes, and the significance of each item in this particular case. Each class of water has its own characteristics. The presence, in quantity, of any given element is interpreted according to the kind of water under consideration. Spring-water is, of course, colorless; lake-water of equal safety is probably colored. Spring-water must be, as a rule, free from ammonia; lake-water may at times contain considerable amounts without detracting from its good character.

Classification of Waters. — To facilitate examination, therefore, waters may be divided into three classes: first, cistern, brook, pond, and river water—so-called *surface-water;* second, spring and deep-well water; and third, shallow wells and sewage effluents.

Water of the last two classes has been for greater or less periods of time in contact with rock and filtered through sand, hence is designated as *ground-water.*

A few examples taken from the different kinds of water showing the varying conditions to which they are subjected may serve to make the rules of interpretation clearer.

Surface-Waters.—When rain-water falls on slated or shingled roofs and is conducted into cisterns, it carries with it whatever deposits have collected, the pollen of forest-trees or disease-germs from city slums many miles away; from metal roofs it takes either the metal itself or the paint used to protect the surface. In all cases, lower forms of animal life, small insects, and soot from chimneys may be present. These foreign substances should be at once filtered out without allowing time for organic decay, unless there is an automatic device for wasting the first washings of the collecting surface. There are still substances in solution which would be better away; therefore the water is allowed to stand quietly in order that the changes may have time to take place—to ferment, as it is often technically expressed. After

this season of purification the water is again filtered and stored ready for use. There is usually color and a little ammonia, but rarely nitrates. The soluble metals, if once present, still remain. It goes without saying that all such cisterns must be absolutely impervious to surface drainage. For lack of one or all of these precautions, cistern-water has often been found to be contaminated from cesspools, from leaden or painted roofs, or from decaying organic matter.

Brook-water.—The rain that falls on mountain slopes of granitic or other insoluble rocks washes from them whatever loose earth may have fallen there, and from the firmly fixed lichens the small insects and other animal forms which they harbor. These are transported in brooks to the lower lands where the organisms decay, the heavier earthy particles falling out by the way.

If the upland rocks and soil yield a portion of mineral salts to the water, it may come out clear and colorless even if it has not penetrated to an appreciable depth.

The water from these forest brooks, after remaining impounded in a clean lake or reservoir, exposed to sunlight and air, often becomes the safest source of supply. As with cisterns, so with reservoirs, filtration, natural or artificial, may take place previous or subsequent to storage, or both before and after.

Lake or Mixed Water.—Lakes are fed by springs as well as by brooks, or by that portion of rainfall which passes a few inches below the surface, and is filtered before reaching the main body. If the banks are sandy and uninhabited, the water will show good effects from this filtration; but if the seepage-water comes from a settled country, it will bring either ammonia or nitrates. The analysis will quickly show this if the water sample can be taken before it has mixed with that bearing the spores of plants which are fed by

nitrates. Often the very presence of these plants furnishes the proof sought.

River-waters.—A large stream, especially a muddy one, may receive the drainage of half a dozen cities a hundred miles distant and yet not give conclusive evidence of dangerous contamination, while a small river with a rapid current may become unsafe from the presence of a few villages a dozen miles away.

Northeastern America is so well supplied with uninhabited high lands for collecting-grounds, and with basins in the glacial drift for storage in natural or artificial lakes, that very few rivers need to be used after they have become polluted. The Merrimac and the Hudson are, however, so used. In other parts of the country the use of rivers is an increasing necessity, requiring municipal filter plants.

From every point of view organic matter should be kept as far as possible out of running streams which may at any time be needed for public supplies, or the natural purification by algæ should precede the final filtration and storage. It is quite probable that this double treatment may be more frequently required as unpolluted water becomes more scarce.

What the method of filtration shall be depends upon the character of the water, whether clear or turbid with clay, whether certainly polluted or only with a remote possibility of contamination. Each problem must be studied by itself without prejudice in favor of any one method. It is the result which must be kept in mind, namely, the furnishing of safe and acceptable water to the community.

Effect of the Storage of Surface-water.—In interpreting his results, the analyst should take into account the influence which the keeping of water in basins has upon its character. Storage of surface-water is of utmost importance in all cases

of doubt. Most disease-germs find such water an unfavorable medium for prolonged life, since exposure to sunlight soon destroys the darkness-loving bacteria, and a certain sterilizing effect results from the growth of green algæ, so that water considerably polluted becomes purified if given time for the various agents to do their work; but time is essential.

Odors.—For surface-waters one of the links in the chain of evidence is found in the odor, cold and hot, which to the trained and sensitive nose often gives convincing testimony. A musty odor, unmistakably different from a mouldy vegetable smell, betrays sewage contamination even when the chemical analysis might not be convincing. This odor is not always taken out by filtration, neither is that of certain organisms growing in stored water, notably *Anabæna* and *Synura.* A study of these organisms is invaluable to the routine observer who watches the seasonal and annual changes in his reservoir.

Turbidity and Sediment.—The determination of turbidity and sediment, added to the odor, tells much to the expert, but very little to the inexperienced student. Turbidity may be due to drainage contamination, to growth of bacteria, to clay, to iron, to swarms of micro-organisms. Sediment may be sand, zoöglea, fragments of plants or animals, or ferric oxide.

Filtration.—The subject of filtration has been so extensively treated elsewhere that the student is referred to the bibliography on page 248. There are cases in which it is preferable to run the risk of too much alum in the drinking-water, and too much sulphuric acid in boiler feed-water, rather than of too many micro-organisms with the accompanying organic matter.

It will have been noticed that the ideal natural water is

that which has been earth-filtered, and thus all suspended matter, including microbes, has been removed. This supposes that sufficient time has elapsed so that all decomposing organic matter has been destroyed. Man tries to imitate nature's processes, but expects to accomplish it in moments instead of months.

The era of house-filters, those admirable culture-grounds for bacteria, is happily nearly past. Taxpayers are becoming convinced that a good original water-supply in competent hands is worth paying for. Where straining only is needed, a flannel bag washed daily is as efficient as any faucet-filter. If the latter takes out color as well, it should be closely watched. Water should not be first boiled and then filtered, but first filtered and then boiled.

Summary.—Surface-water.—In general it may be said that the waters of the first class found in New England are generally more or less colored, and contain more or less suspended organic life and its *débris*, which often impart a decided odor to the water. These waters, draining for the most part wooded and sparsely populated regions, are low in free ammonia, nitrates, and nitrites; low, also, in mineral salts, and with only a slight excess of chlorine over the normal. They are usually high in organic matter and albuminoid ammonia even when entirely free from pollution.

In other parts of the United States surface-waters may be low in color, but with much suspended clay and silt, and may hold in solution notable quantities of mineral salts. The latter aid greatly in the clarification by artificial filtration, which is so often rendered necessary by the excessive turbidity even if not by sewage contamination.

In Table IV, page 225, will be found examples showing at a glance how profoundly the character of a water is affected by the geological horizon, whether its source is in the glacial

culty of securing a sample from great depths without contamination by surface exposure—pipes open to the air harboring many forms of life.

Deep wells, 700 feet and more, are not likely to be dangerous. They may often contain ammonia from prehistoric coal-fields or tertiary deposits, but rarely nitrates. This is accounted for by the fact that "the result of the changes of the nitrogenous organic substances which fall into the earth is, without doubt, frequently the formation of gaseous nitrogen." Also, that "salts of nitric acid on penetrating into the depths of the earth give up their oxygen." *

Owing to their long sojourn in the depths of the earth, these waters are higher in mineral substances than surface-waters. Since their origin is unknown, the chlorine cannot be correctly gauged, especially as there are saline waters deep down in rock cavities in all parts of the world.

It is usually believed that these deep wells furnish a safe, palatable water when the kind and amount of mineral matter is not objectionable.

Shallow Wells.—It is not to be wondered at that waters

---

* Mendeléeff: "Chemistry," p. 223.

language. A complete history of each specimen of this class of ground-water is desirable, and with sufficient patience and care it may be obtained with reasonable accuracy, if the principles governing the circulation of water and the changes of the organic matter it carries be kept well in mind.

It is certain at once that absence of color, of organic matter in any form, and of odor should be insisted upon, for ground-water is filtered water and the filter should be doing its work.

A modicum of geological knowledge is essential, as the presence of shaly or slaty rock will permit the passage into underground water of surface drainage with less purification than will a granite or sandstone region. A clayey soil is a less efficient filter than a sandy loam and permits the pollution to travel farther.

Nitrogen in Well-water—It may be taken as an axiom that the only form of nitrogen permissible in a good ground-water is that of nitrates, a fully oxidized or mineralized food for green plants. If nitrites are also present, a source of pollution is at hand, for, as has been said, nitrites indicate either a stage of oxidation not completed or one of reduction from nitrates in the presence of organic matter. If free am-

drift of the Appalachian region, or in the limestone of the Hudson River Valley, or in the saline deposits of the subsided areas.

Deep Wells and Springs.—The waters of the second class are derived from the depths of the earth, far below any possible surface contamination, and have long been imprisoned in the dark and cold, and often subjected to great pressure. The influence of pressure on organisms has not been entirely worked out, but from what is known it is probably very unfavorable to the life of the lower organisms. The results of many bacterial examinations have been vitiated by the difficulty of securing a sample from great depths without contamination by surface exposure—pipes open to the air harboring many forms of life.

Deep wells, 700 feet and more, are not likely to be dangerous. They may often contain ammonia from prehistoric coal-fields or tertiary deposits, but rarely nitrates. This is accounted for by the fact that "the result of the changes of the nitrogenous organic substances which fall into the earth is, without doubt, frequently the formation of gaseous nitrogen." Also, that "salts of nitric acid on penetrating into the depths of the earth give up their oxygen." *

Owing to their long sojourn in the depths of the earth, these waters are higher in mineral substances than surface-waters. Since their origin is unknown, the chlorine cannot be correctly gauged, especially as there are saline waters deep down in rock cavities in all parts of the world.

It is usually believed that these deep wells furnish a safe, palatable water when the kind and amount of mineral matter is not objectionable.

Shallow Wells.—It is not to be wondered at that waters

---

* Mendeléeff: "Chemistry," p. 223.

of the third class—ground-water, taken from just beneath the surface layers of the soil—should contain many substances foreign to the waters about them as well as to those at greater depths. The shallow wells, which are practically more or less diluted sewage effluents, present the greatest variety. They may be clear and colorless and show as great organic purity as the best mountain spring. In other cases, the overworked filter permits the passage of organisms and undecomposed material. In either case there will be found those compounds which, being soluble and stable, are carried with the water as signs to be read by him who knows the language. A complete history of each specimen of this class of ground-water is desirable, and with sufficient patience and care it may be obtained with reasonable accuracy, if the principles governing the circulation of water and the changes of the organic matter it carries be kept well in mind.

It is certain at once that absence of color, of organic matter in any form, and of odor should be insisted upon, for ground-water is filtered water and the filter should be doing its work.

A modicum of geological knowledge is essential, as the presence of shaly or slaty rock will permit the passage into underground water of surface drainage with less purification than will a granite or sandstone region. A clayey soil is a less efficient filter than a sandy loam and permits the pollution to travel farther.

Nitrogen in Well-water—It may be taken as an axiom that the only form of nitrogen permissible in a good ground-water is that of nitrates, a fully oxidized or mineralized food for green plants. If nitrites are also present, a source of pollution is at hand, for, as has been said, nitrites indicate either a stage of oxidation not completed or one of reduction from nitrates in the presence of organic matter. If free am-

monia be present, *it is safe to say that the source is not only near but in actual contact,* since but a few hours' time is needed to oxidize the ammonia in any soil not waterlogged. It may also be pretty safe to assume that bacteria are present, since ammonia is the first stage of that decomposition which they accompany. It is the part of prudence, therefore, to avoid any water which contains both free ammonia and nitrites above .200 or .300 parts per million of the first, and .020 or .030 of the second.

The absorption of nitrogen by plants is rarely complete, so that it usually appears in far larger quantities in contaminated ground-waters than could be obtained from purified rain-water. The leaching cesspool discharges its liquid contents below the zone of green-plant life; fertilized soil also yields a portion of its food value to the lower layers. A small portion of the nitrogen of vegetable origin may appear as nitrates, but only as a derivative of soil rich in humus is it likely to play any considerable part. *In eastern America nitrates above 0.5 parts per million would arouse suspicion, and above 5 parts would in most cases prove previous pollution.*

It is evident that in the use of nitrogen as an indicator of the conditions of a water we are limited, by the changeful character of the compounds, to certain not-to-be-mistaken amounts, and that in the majority of cases the evidence given is not decisive.

Chlorine in Well-water.—Fortunately there is another element not so eagerly sought for by plants and not liable to so many transformations. Thanks to the great solubility of its common compounds and to their stability, chlorine, once a constituent of a given body of water, is not extracted therefrom and remains as a telltale to reveal the past history of a stream or spring. If a man is judged by the company he

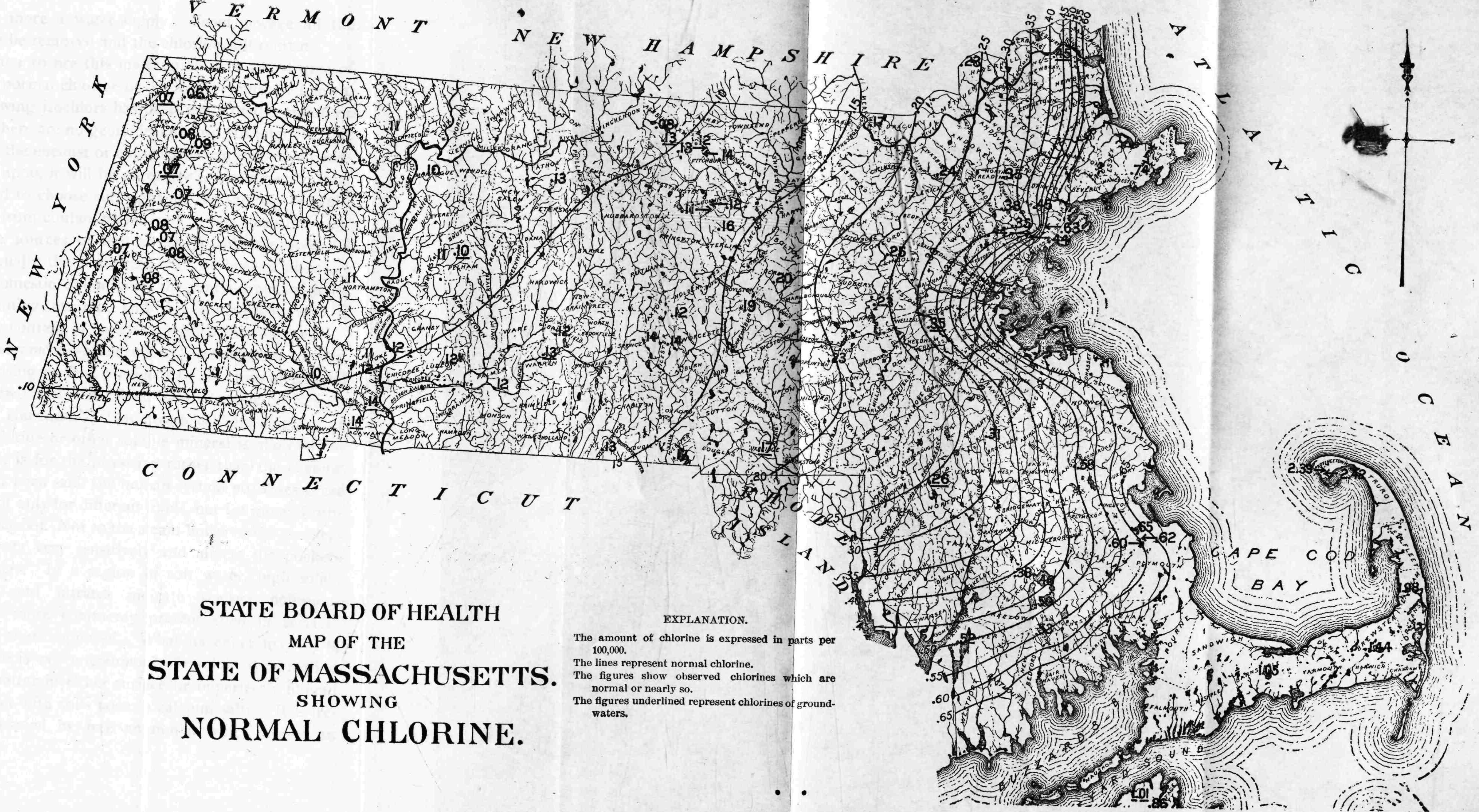

STATE BOARD OF HEALTH
MAP OF THE
STATE OF MASSACHUSETTS.
SHOWING
NORMAL CHLORINE.

EXPLANATION.

The amount of chlorine is expressed in parts per 100,000.

The lines represent normal chlorine.

The figures show observed chlorines which are normal or nearly so.

The figures underlined represent chlorines of ground-waters.

keeps, much more a water-supply. From sewage all the nitrogen may be removed and the chlorine still remain.

But in order to use this information with any degree of certainty the normal chlorine of the locality must be known. If a map showing isochlors has been made of the region or State, and if there are no geological deposits to interfere, this is easy; but if the chemist or engineer has an unknown country to report upon, it will be necessary to examine the local conditions and to choose six, eight, or ten samples of probable freedom from contamination and to test them for comparison. The sources of the excess of chlorine over the normal are usually the sink-drain with its burden of salted water from domestic operations; the house-drain, with its chlorine-containing excreta; and the stable-drain, with a slight chlorine content in comparison with the other two.

Mineral Substances.—Since water is a universal solvent, it is not surprising to find considerable amounts of mineral matter in the two columns "Total Solid Residue on Evaporation" and "Hardness." How much calcium sulphate or magnesium chloride or other soluble mineral is allowable in a potable water is for the physician rather than the chemist to say. As has been said, the human system possesses great adaptability, not only for different foods, but for mineral substances water-carried. Not so the steam-boiler or the laundry-tub, which reacts very sensitively and affects the pockets of the consumers. In a region of soft water, high solids with chlorine and nitrates indicate sewage pollution. Silica is much more commonly present even in surface-waters than is often supposed. What its effect may be is unknown. Iron is not uncommonly found in combination with organic matter in either surface or imperfectly filtered waters in contact with soils poor in calcium salts. It is frequently accompanied by free ammonia, which causes an

abundant growth of *Crenothrix*. It is also present in deep wells in the form of carbonate, which precipitates on exposure to warm air.

In a considerable number of cases of public water-supply there is a mixture of surface and ground water which complicates the verdict, requiring a most delicate balancing of probabilities. The mineral contents often aid in this decision. Well-waters, too, are often exposed to surface-wash because of poor protection at the mouth. *Cyclops* or other surface-water organisms often indicate this.

Water-pipes.—After all, if the pipes conveying the water are of lead or brass, an additional danger appears. Generally speaking, the purer the water the greater the risk. No common metal seems to withstand the action of soft water; six to eight years being the average age of galvanized pipe, and eight to ten of iron pipe. It would seem as if cement-lined pipe must come into greater use until some kind of glass is invented which will withstand this corrosive action and yet admit of plumber's connections.

Value of Tests.—It is often asked if some tests cannot be made by the ordinary person of average intelligence which will enable him to tell the quality of a water as well as the expert to whom he pays ten or twenty dollars for an opinion. A careful perusal of the preceding pages will have answered the question in the negative. There is no assay of water as there is of gold and silver. Not one but ten or twenty tests must be made. Not only must the tests be made with the utmost care and cleanliness of person, utensils, and room, but the results must be studied in the light of other experience and other knowledge, geological and biological, and after all this is done there is an array of circumstantial evidence which must be carefully weighed by one whose judgment and experience enable him to read clearly where another might

see nothing. The value of a water-analysis is in direct proportion to the knowledge and experience of the one who interprets it. Clinical skill in addition to theoretical knowledge is required to interpret the figures obtained in the course of a water-analysis, as in the symptoms of a disease: and the analogy goes still further, for as some diseases are clearly defined, others are so complicated that only those who have had long experience can outline a safe course of treatment so some waters bear the marks of their character so plainly as not to admit of mistake, while others require most careful study. *For these reasons the value of water-analysis should not be decried because the fears aroused by reports given by unskilled analysts prove groundless, any more than the practice of medicine should be discarded because inexperienced men make mistakes.*

Is the water in any given case safe for drinking? To answer this question there is needed a knowledge wider than a chemist's of the relation of decaying organic matter and of the germ-carrying power of water to outbreaks of disease There must be added the knowledge of the biologist, the engineer, and the sanitarian.

CHAPTER VII.

ANALYTICAL METHODS.

General Statements.—Water-analysis cannot be carried o in an ordinary laboratory. In order to obtain satisfactory results it is necessary to have a room set apart for the purpose, and to exclude rigidly all operations which tend to the production of fumes or dust. Where such minute traces of substances are dealt with as in water-analysis, too much care cannot be taken to insure the absolute cleanliness of the ap paratus and the surroundings. It is desirable that the room be well lighted, and if possible the windows should face toward the north.

The methods for the examination of water which are described in this chapter by no means comprise all that are in use. The directions are given for the use of students in our own laboratory under the conditions obtaining, i.e., of large classes and of several courses of study, with especial reference to educational rather than purely technical needs, and in some cases, no doubt, the traditions of thirty years may have unduly persisted. The methods have been so selected as to introduce a variety of apparatus and to illustrate principles. They have also been subjected to a thorough test in meeting the demands of practical work.

Collection of Samples.—For the collection of water samples, glass-stoppered bottles of about a gallon capacity are best. Those used in this laboratory are of white glass, fifteen inches high to the top of the stopper, five and a half inches

in diameter, and weigh about three pounds. They have flat, mushroom stoppers, on which is engraved a number to correspond with that on the bottle. The bottles, before being sent out, are thoroughly cleaned with potassium bichromate and sulphuric acid, washed with distilled water and dried. If glass-stoppered bottles are not at hand, new demijohns fitted with *new* corks may be used. A glass bottle or a demijohn is much to be preferred to an earthenware jug, because, if for no other reason, it is so much easier to be sure that the interior is clean. It should always be borne in mind that in water-analysis the question is one of very minute quantities of material, and that the methods to be employed are extremely delicate. Hence, in the case of many waters, careless handling of the sample would contaminate the water to a sufficient extent to render valueless the results obtained in the laboratory. In collecting samples, the following directions should be closely followed: *

Directions for Collecting Samples for Analysis.—*From a Water-tap.*—Let the water run freely from the tap for a few minutes before collecting the sample. Then place the bottle directly under the tap and rinse it out with the water three times, pouring out the water completely each time. Place it again under the tap; fill it to overflowing and pour out a small quantity so that there shall be left an air-space under the stopper of about an inch. Rinse off the stopper with flowing water; put it into the bottle while still wet and secure it by tying over it a clean piece of cotton cloth. Seal the ends of the string on the top of the stopper. Under no circumstances touch the inside of the neck of the bottle or the stem of the stopper with the hand, or wipe it with a cloth.

From a Stream, Pond, or Reservoir.—Rinse the bottle and

* Ann. Rep. Mass. State Board of Health, 1890, p. 520.

stopper with the water, if this can be done without stirring up the sediment on the bottom. Then sink the bottle, with the stopper in place, entirely beneath the surface of the water and take out the stopper at a distance of twelve inches or more below the surface. When the bottle is full replace the stopper, below the surface if possible, and secure it as directed above. It will be found convenient, in taking samples in this way, to have the bottle weighted so that it will sink below the surface, and to remove the stopper by a cord. It is important that the sample should be obtained free from the sediment at the bottom of a stream and from the scum on the surface. If a stream should not be deep enough to admit of this method of taking a sample, dip up the water with an *absolutely clean vessel and pour it into the bottle after the* latter has been rinsed.

The sample of water should be collected immediately before shipping by express, so that as little time as possible shall intervene between the collection of the sample and its examination. All possible information should be furnished concerning the source of the water and of possible sources of contamination. For example, in the case of a well, the proximity of dwellings, cesspools, or drains should be recorded, and the character and slope of the soil, whether toward or away from the well, should be noted. In the case of a surface-water, mention any abnormal or unusual conditions; as, for instance, if the streams or ponds are swollen by recent heavy rains, or are unusually low in consequence of prolonged drought, or if there be a great deal of vegetable growth in or on the surface of the water. Record, in short, any circumstantial evidence which by any possibility may aid in the final judgment.

The question of proper collection of samples is an important one, and the chemist is perfectly justified in refusing to

give an opinion in regard to the purity of a water which he has not himself collected. The ignorance and carelessness shown by people who send samples for analysis are oftentimes quite amusing. Samples have been received at this laboratory in almost every kind of container imaginable, from an imperfectly rinsed whisky-bottle to a discarded syrup-jug, with about an inch of maple sugar in the bottom. One sample was sent all the way from Georgia in a stone jug with a corn-cob inserted for a stopper. Others are received with the stopper carefully (?) protected by a mass of sealing-wax or candle-grease. A favorite way is to send the sample in a fruit-jar packed in sawdust or straw. Opinions evidently differ greatly, too, in regard to the size of sample that is needed. It is no uncommon occurrence to have a person come into the laboratory with the remark, "Here is a sample of water that I want analyzed," supplemented by the production from a coat-pocket of a homœopathic vial or a sample of half a pint or so of water. Of course, in cases like these practically nothing can be done.

Preparation of the Sample for Analysis.—Since changes in the composition of a contaminated water are constantly going on, the analysis of the sample should be begun without delay. The bottle is held under the tap, and the neck and stopper are washed free from adhering dust. The stopper is rinsed off with some of the water from the bottle. Qualitative tests should be made for ammonia, nitrites and chlorine. With waters containing much suspended matter, and in the case of surface-waters in which it is desired to distinguish between the organic matter in solution and that in suspension, a portion of the water should be filtered. In most cases the suspended matter can be removed by filtration through paper. For this purpose only the best Swedish filter-paper should be used, and the filters should be first

thoroughly washed with ammonia-free water. With some waters containing very finely divided clay in suspension, filtration through paper will not be satisfactory, and the sample must be filtered by suction through a cylinder of unglazed porcelain, such as an ordinary Chamberland-Pasteur filter-tube. In the filtered water it is customary to determine the dissolved solids, the albuminoid ammonia, or the organic nitrogen, and the color.

Determination of Free and Albuminoid Ammonia.—*Apparatus.**—The apparatus used for the determination of ammonia is that shown in Fig. 6. It consists of a round-bottomed flask of 900 c.c. capacity, with square shoulders and a narrow neck five inches long, and an ordinary Liebig condenser fitted with an inner tube of block tin, $^3/_{16}$ of an inch in diameter. The flask is closed by a cork carrying a glass tube bent nearly at right angles, which slips for some distance within the tin tube of the condenser. A tight joint is made by means of a large cork, which is shown in section in Fig. 7. The large cork serves the double purpose of making a tight joint with the

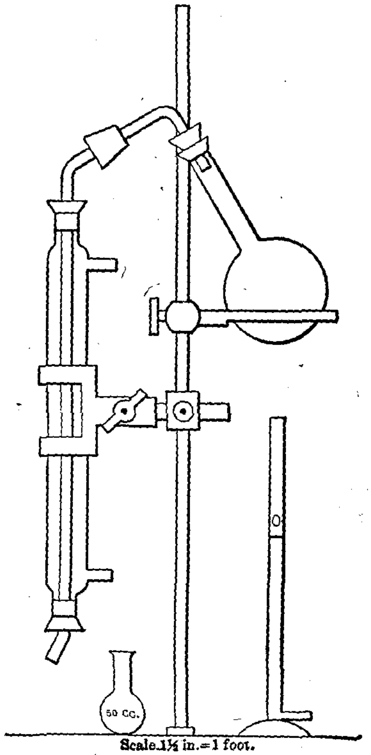

FIG. 6.—Apparatus for Ammonia Distillation.

* A. H. Gill: *J. Anal. and App. Chem.*, **6** (*1892*), 669.

condenser and also as a convenient means for handling the small glass tube. In order to remove the cork from the distilling-flask, the glass tube carrying it is simply turned to one side, using the large cork as a pivot. The flasks are heated with the free flame of a Bunsen burner.

New flasks are treated with boiling dilute sulphuric acid and potassium bichromate before they are used. New corks should be steamed out for one or two hours. A good, sound cork will last for several months with daily use. The distillates are received into small 50-c.c. flasks and poured into Nessler tubes for nesslerization. The Nessler tubes are 11 inches long and $\frac{5}{8}$-inch internal diameter, the 50-c.c. mark being about two inches from the top. It is possible to so arrange the apparatus as to collect the distillates directly in the Nessler tubes and at the same time render the apparatus more compact by having several condenser tubes run through a common cooling tank. For class work, however, the apparatus just described has been found most suitable.

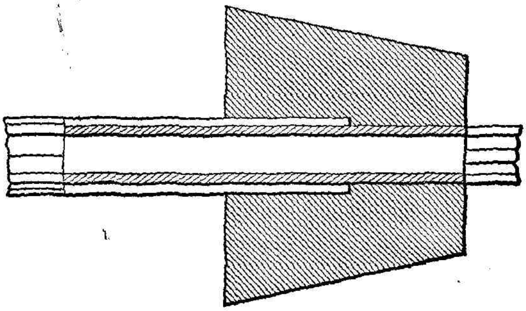

CORK JOINT
Full Size

FIG. 7.

Directions.—Free the apparatus from ammonia by distilling off the water in the flask, testing each 50-c.c. portion of the distillate until no color is given with the Nessler reagent. When the distillate is free from ammonia, pour the

water left in the flasks into the bottle marked "Ammonia-free Residues."

Shake the bottle thoroughly to mix the sample, and measure out in a calibrated flask a portion, usually 500 c.c., for the ammonia, the amount taken depending upon the result of the qualitative test. Pour this into the distilling-flask, and distil over three portions of 50 c.c. each into the graduated flasks. Regulate the height of the flame so that the time of distilling 50 c.c. shall be not more than eight and not less than five minutes.

After the free ammonia has been distilled off, allow the contents of the flask to cool slightly; then add 40 c.c. of alkaline permanganate through a funnel, taking care that none of the alkaline solution touches the neck of the flask, and proceed with the distillation of the albuminoid ammonia; that is to say, the determination of the nitrogen of the undecomposed organic matter. With colored surface-waters distil off five portions of 50 c.c. each; with waters of low organic content three or four portions will suffice.

It is impossible to convert all of the organic nitrogen into ammonia by boiling with alkaline permanganate. The amount of ammonia which is thus obtained depends not only upon the character of the substances, but also upon the concentration of the solution and the rate of boiling. In order that the albuminoid ammonia in potable waters shall bear some definite relation to the total organic nitrogen it is necessary that these conditions shall be duplicated as nearly as possible in different determinations; that is, the alkaline permanganate must be added to a definite volume of the water, and the boiling must be carried on at a definite rate. Some of the highly colored surface-waters give up their nitrogen very slowly by this treatment; polluted waters, on the other hand, yield the ammonia more rapidly, so that the observation of the relative amounts

found in the successive portions is of the utmost importance in forming a judgment.

Have the Nessler tubes clean and thoroughly rinsed, and, if not used for collecting the distillate, pour into them the contents of the 50-c.c. receiving-flasks. Prepare the standards by adding to Nessler tubes nearly filled with ammonia-free water varying quantities of the standard ammonium chloride solution; for instance, 0.1, 0.3, 0.5, 0.7, 1.0, 1.3, 1.5, 2.0, 2.5, 4.0, 6.0 c.c. The standard ammonium chloride solution contains .00001 gram N in one cubic centimeter.

Mix the contents of the tubes by rotating them between the palms of the hands (never shake them like a test-tube or stir them with a rod), allow them to stand for two or three minutes and add 1 c.c. of the Nessler's reagent to the whole set, and to the samples to be tested, as rapidly as possible. At the end of ten minutes match the colors and record the amount of ammonia.

As an example of a colored surface-water may be given the following results from distilling 500 c.c.:

Free Ammonia.			Albuminoid Ammonia.		
1st	50 c.c.,	0.7 c.c.	1st	50 c.c.,	4.5 c.c.
2d	50 c.c.,	0.3 c.c.	2d	50 c.c.,	2.8 c.c.
3d	50 c.c.,	0.0 c.c.	3d	50 c.c.,	1.5 c.c.
			4th	50 c.c.,	1.0 c.c.
			5th	50 c.c.,	0.5 c.c.
		1.0 c.c.			10.3 cc..

In this case the free ammonia would be 0.020 and the albuminoid ammonia .206 parts per million.

Notes.—When the amount of ammonia shown by the qualitative test is high, i.e., shows a color equivalent to 1 c.c.

of the standard ammonia solution, a less quantity than 500 c.c. should be taken for the distillation, 100 c.c. or, in the case of sewage, even 10 c.c. being diluted to 500 c.c. with water free from ammonia. If the waters give much trouble from bumping, coarsely crushed pumice may be used in the distilling-flask, although it is difficult to keep it pure enough for use with waters very low in ammonia. If pumice is used, care should be taken that the fragments have rounded corners to avoid scratching the glass. Sewage and soils may be distilled with steam in the apparatus figured on page 92 under the Kjeldahl process.

In dealing with sewage or sewage effluents, which are very high in free ammonia, if the ammonia were collected in three portions, so much would distil over in the first portion that the color given with Nessler's reagent would often be too deep to read or a precipitate might form. To avoid this the total distillate of 150 to 175 c.c. is collected in a 200-c.c. graduated flask, made up to the mark, thoroughly mixed by pouring, and then 50 c.c. of it taken for nesslerization. In this way the ammonia is distributed more evenly in the distillate and the determination is not sacrificed.

In the case of water from suspicious wells and of sewage effluents, about 0.5 gram of freshly ignited sodium carbonate should be added before distillation, in order to make sure that the reaction of the water is not acid, and to decompose any urea which may be present. This will not be necessary with ordinary surface-waters, as experience has shown that they almost always have a slight alkaline reaction.

The necessity for the use of soda will be readily seen from an inspection of the following results obtained on the distillation of bad well-water:

Without Soda.		*With Soda.*	
Free NH_3.	Alb. NH_3.	Free NH_3.	Alb. NH_3
2.0	7.0	50 out of	1.0
2.5	3.0	200 = 4.8	.7
3.0	2.0	Total = 19.2	.3
	1.0		

For measuring very deep colors with the Nessler reagent, say above 6.0 c.c. of the standard ammonium chloride solution, it will often be found convenient to use an aliquot part of the distillate and calculate the reading for the whole amount. In doing this it is important that the color of the standard should not differ much from the color of the distillate, for the depth of color given by the Nessler reagent is not exactly proportional to the amount of ammonia alone; that is to say, the depth of color obtained by nesslerizing 6.0 c.c of ammonia solution is more than twice that obtained with 3.0 c.c. in the same volume of water.

In order to secure the most accurate results it is important that the temperature of the distillates to be nesslerized and of the standards be the same, since the warmer solutions give a more intense color with the Nessler reagent.

The compounds produced by the action of ammonia on mercuric solutions are considered as substitutions of 1 Hg for 2H in NH_4, and are called mercur-ammoniums. Tetramercur-ammonium iodide (NHg_2I), the compound formed by addition of the Nessler reagent, is a brown precipitate, soluble in excess of KI in the presence of KOH with a brownish-yellow color proportional within certain limits to the amount of NH_3:

$$NH_3 + (2HgI_2 + 2KI + 3KOH) = NHg_2I + 5KI + 3H_2O.$$

The "free ammonia" in all probability does not exist in the water in a free state or as the hydroxide; it is probably

present in the form of carbonate or of chloride. When water containing these or similar compounds of ammonia is boiled, they are decomposed and free ammonia passes off with the steam and is found in the distillate; hence the origin of the name.

Determination of Total Organic Nitrogen by the Kjeldahl Process.—*Directions.*—Measure 500 c.c. of the water into a round-bottomed flask of 750 c.c. capacity and

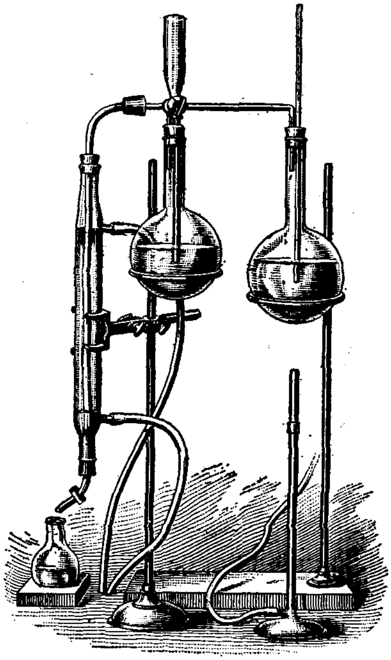

FIG. 8.—Apparatus for Distilling Ammonia by Steam.

boil until about 200 c.c. have been driven off. (The free ammonia which is thus expelled may be determined, if desired, by connecting the flask with a condenser.) Allow the water remaining in the flask to cool, and add 10 c.c. of pure concentrated sulphuric acid free from nitrogen. Mix

by shaking; place the flask in an inclined position on wire gauze under the hood and boil cautiously until the water is all driven off. Place a small funnel in the neck of the flask to prevent the escape of acid fumes, and continue the heating for at least half an hour after the sulphuric acid becomes white. Meanwhile rinse out the distilling apparatus (see Fig. 8), and free it from ammonia as usual. Then, after the acid in the digestion-flask has cooled, rinse down the neck of the flask with 100 c.c. of ammonia-free water and attach the flask to the distillation apparatus. Add 100 c.c. of potassium hydroxide solution through the separatory funnel and distil off the ammonia by steam, receiving the distillate in a 250-c.c. graduated flask. Conduct the distillation rather slowly until the first 50 c.c. have distilled over, then distil more rapidly until about 175 c.c. have been collected. Make the volume of the distillate up to 250 c.c. with ammonia-free water, mix it thoroughly and take 50 c.c. for nesslerization.

Notes.—The principles involved in the method consist in the oxidation of the carbon and hydrogen of the organic matter by boiling sulphuric acid, the nitrogen being converted into ammonia and held by the acid as ammonium sulphate. The ammonia is then liberated and distilled off from an alkaline solution. The use of mercury and of potassium permanganate to assist in the oxidation has been found to be unnecessary, as the organic matter in natural waters is much more easily oxidized than in other substances,—flour, for instance. The presence of nitrates and nitrites in waters has not been found to interfere with the accurate determination of the organic nitrogen. The error which has been found by Kjeldahl and Warrington to be caused by the presence of nitrates seems to disappear when the organic material is diluted to the considerable extent that exists in natural waters. The high chlorine found in some well-waters does

not interfere with the method to any extent, but this determination does not possess much value in this class of waters, which are low in organic nitrogen.

In carrying out the digestion with sulphuric acid, the greatest care must be taken to prevent access of ammonia or dust from any source. The acid solutions will absorb ammonia from the air or from the dust of the laboratory if they are allowed to remain uncovered for any length of time. This source of error may in some instances be sufficiently large to render a determination valueless, even in a room which is to all appearances free from ammonia-fumes. Hence the operation should, if possible, be carried to completion within twenty-four hours, and for every set of determinations a blank analysis should be made with ammonia-free water in order to make a correction for the ammonia in the reagents, and for that accidentally introduced during the process.

As the result of many hundred comparative determinations of the organic nitrogen and of the albuminoid ammonia in natural waters which take their origin in the glacial drift, it has been found that the nitrogen given by the albuminoid-ammonia process as directed in the previous pages is about one-half of the total organic nitrogen as given by the Kjeldahl process; in the case of sewages and polluted waters it is very variable owing to their irregular composition.

Determination of Nitrogen in the Form of Nitrites. —*Directions.*—When the determination of the free and albuminoid ammonia is well under way, the estimation of nitrogen in the next stage of decay, that of nitrites, should be begun. If the water is colorless, measure out the required amount, usually 100 c.c., into a 100-c.c. tube. If the water possesses color which cannot be removed by simple filtration, it should be decolorized as follows: Thoroughly rinse

with the water a 250-c.c. glass-stoppered bottle; pour into it about 200 c.c. of the sample, add about 3 c.c. of the milk of alumina and shake the bottle vigorously. Let the bottle stand for ten or fifteen minutes and filter through a small plaited filter which has been thoroughly washed with water free from nitrites. Enough should be filtered for both the nitrites and nitrates. At the same time, make up standards by adding to the tubes containing about 100 c.c. of nitrite-free water varying amounts of the standard solution; for example, 1.0, 3.0, 5.0, and 10.0 c.c.

To each of the tubes containing the colorless water and to the standards add 10 c.c. of sulphanilic acid in acetic acid and 10 c.c. of naphtylamine acetate. After standing for ten minutes compare the colors. One cubic centimeter of the standard nitrite solution contains 0.0000001 gram N as nitrite. The determination must be completed within half an hour, since the air of a room in which gas is burned contains nitrites.*

Notes.—If the color obtained is more than that given by 20 c.c. of the standard solution, as it may be in the case of water from bad wells and sewage effluents, the water should be diluted with nitrite-free water, 10 c.c. or even 1 c.c. being made up to 100 c.c. before adding the reagents, since colors above 20 c.c. are too deep for accurate comparison. In many cases, however, it may be more convenient and sufficiently accurate, where the colors are not very much greater than 20 c.c., to read the color in an aliquot part as described in the determination of ammonia on page 103.

The reactions which take place consist first in the diazotizing of the sulphanilic acid by the nitrite present in acid solu-

* Defren: *Tech. Quart.*, 9 (*1896*), 238; Axson: *loc. cit.*, 12 (*1899*), 219.

tion, forming diazobenzenesulphonic anhydride. This reacts with the naphtylamine hydrochlorate, forming azo-α-amido-naphtylic parabenzol-sulphonic acid, which gives the pink color to the solution, the amount formed depending upon the amount of nitrite present.

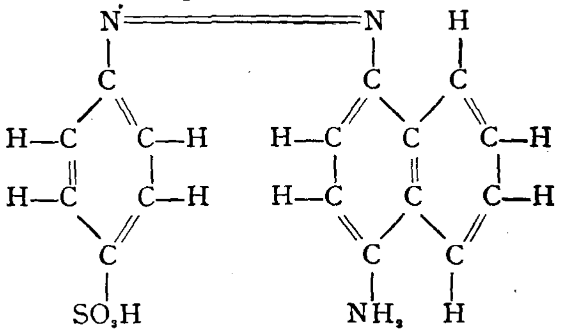

Determination of Nitrogen in the Form of Nitrates.* —*Directions.*—Nitrogen in the fourth stage, that of nitrates, is next determined. In the case of ground-waters, measure two portions, one of 2 c.c. and one of 5 c.c., from the bottle, with a capillary pipette, into three-inch porcelain evaporating-dishes; for surface-waters, always low in nitrates, take 10 c.c. from the portion already decolorized in the determination of the nitrites. Place the dishes on the top of the water-bath and let their contents evaporate gently until one or two drops are left; then set them away in a place free from dust, that the remainder may evaporate spontaneously. Do not let them go quite to dryness on the bath.

When the water is entirely evaporated, drop six drops of phenol-disulphonic acid directly upon the dry residue and rub it around with a glass rod to insure complete contact of the acid and the residue in the dish. Dilute the acid with 7 c.c. of distilled water and add 3 c.c. of the alkali solution.

* Sprengel: *Pogg. Ann.*, 121, 188. Grandval and Lajoux: *Compt. rend.*, 101, 62. Gill: *J. Am. Chem. Soc.*, 16 (*1894*), 122.

To prepare the standards, measure out the required amount of the standard nitrate solution (see Reagents, page 241) from the burette, add enough water to make the total volume 10. c.c., and two or three drops of the alkali. One cubic centimeter of the standard solution contains 0.000001 gram N as nitrate. The comparison is best made in the small porcelain dishes. For high colors the liquids are compared in tubes similar to the Nessler tubes, but shorter.

Notes.—It will be found that if 10 c.c. of a colored water be evaporated directly, the color obtained with the reagents will be much deeper as well as browner than that given by the standards; hence the necessity for first decolorizing.

Chlorides interfere with the accuracy of the method, but not to any extent when chlorine is present in less than 20 parts per million. If the amount of chlorine be more than this, the evaporation should be made in vacuo over sulphuric acid. Nitrites do not interfere with the test.

The reaction is generally considered to consist in the formation of picric acid. While this is not quantitatively true, it offers the best explanation of the changes that occur. Trinitrophenol (picric acid) is formed by the action of the nitrates in the cold, dry residue upon the phenol-disulphonic acid with which it is moistened:

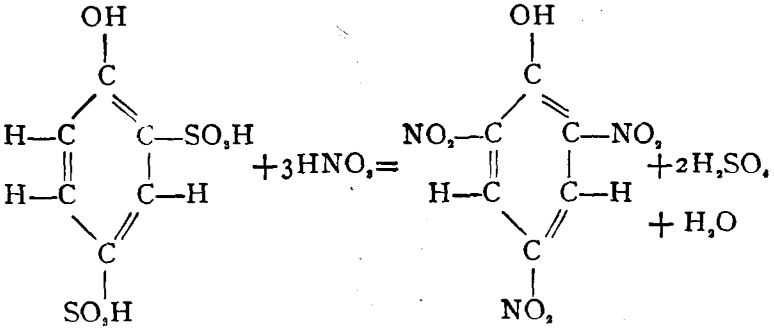

Phenol-disulphonic acid. Picric acid.

The addition of an excess of caustic alkali converts the picric acid to the alkali picrate, which imparts an intense yellow color to the liquid. The best color is obtained by the use of ammonia.

Large quantities of nitrates in colorless water may be determined by reduction to ammonia by sodium amalgam, or by any reaction which yields nitrogen, this being measured as gas.

Determination of the Carbonaceous Matter or "Oxygen Consumed."

Kubel's Hot Acid Method.

Directions.—Measure 100 c.c. of the water into a 250-c.c. flat-bottomed flask; add 8 c.c. of sulphuric acid (1:3) and about 10 c.c. of approximately $\frac{N}{100}$ potassium permanganate. Place the flask on wire gauze and heat it quickly to boiling. When the liquid begins to boil, introduce a small air-blast to prevent bumping and to avoid too great a rise of temperature. Boil the solution for exactly five minutes; remove it from the flame; let it cool one minute, and add 10 c.c. of exactly $\frac{N}{100}$ oxalic acid. Titrate with the permanganate to a faint permanent pink color. In order to find the exact value of the permanganate solution a blank determination must be carried through in precisely the same way, using 100 c.c. of water free from carbonaceous matter.

Example.—In the blank determination, 10 c.c. oxalic acid requires 10.35 c.c. permanganate. Since 1 c.c. of the oxalic acid equals 0.00008 gram of oxygen, 1 c.c. permanganate equals 0.00007729 gram.

Suppose 100 c.c. water + 10 c.c. oxalic acid required 12.57 c.c. permanganate, then $12.57 - 10.35 = 2.22$ c.c. permanganate required by the water. $2.22 \times .00007729 =$

.0001716 gram oxygen for 100 c.c. water = 1.716 parts per million.

Notes.—For highly colored surface-waters 25 c.c. are taken and diluted to 100 c.c. with water free from organic matter; for sewages 10 c.c. are diluted in the same way.

The oxygen given up by the permanganate combines with the carbon of the organic matter and perhaps to a certain extent with the hydrogen, but not with the nitrogen The amount of oxygen consumed bears some relation, therefore, to the amount of organic carbon present in the water but this relation certainly cannot be taken as a definite one in every case, the results varying even with the time of boiling. The method has its greatest value when it is used to compare waters of the same general character and having the same origin; for example, in making periodical tests of the purity of the effluent from a filter. Furthermore, in order that the results shall have this comparative value, it is absolutely necessary that the process shall always be carried out in exactly the same way, even to the minutest detail of quantity, time, and temperature.

In some cases it may be found advantageous to heat the solution upon the water-bath for half an hour instead of boiling it for five minutes. The results, however, will not be exactly comparable with those obtained by boiling.

Different kinds of organic matter behave differently with various oxidizing agents, so that a comparison of the results obtained with different oxidizing agents may throw light upon the character of the organic matter, as well as its amount.* In waters from the watersheds of eastern North America the color and the oxygen consumed have a certain, though somewhat varying, relation.

Determination of Chlorine.—The chlorine is determined in natural waters by the method in general use;

* Woodman: *J. Am. Chem. Soc.*, **20** (*1898*), 497.

namely, titration with a solution of silver nitrate, using potassium chromate as an indicator. Since the exact change of color which constitutes the end-point will vary with the sensitiveness of the eyes of different observers to red, each person should standardize the silver nitrate solution for himself. To do this, measure into a six-inch porcelain dish 25 c.c. of distilled water; add 5 c.c. of sodium chloride solution (1 c.c. = 0.001 gram Cl) from the burette and three drops of potassium chromate solution. Titrate with the silver nitrate solution until the yellow color of the liquid assumes the faintest tinge of reddish brown.

Directions.—Waters which are high in chlorine, i.e., which contain 20 or more parts per million, are titrated directly, using 25 c.c. either with or without the addition of 5 c.c. of the salt solution. Waters which are low in chlorine are concentrated before titration, 250 c.c. being evaporated to 25 c.c. on the water-bath. Brown surface-waters should be decolorized as follows: Pour into a 750-c.c. flat-bottomed flask about 500 c.c. of the water. Add 3 c.c. of the milk of alumina; shake and heat the water quickly to boiling on an iron plate. When the liquid comes to a full boil, at once remove the flask from the plate to avoid loss by evaporation. Place it in an inclined position to allow the alumina to settle. Decant off 250 c.c. of the colorless water into a six-inch dish for concentration to 25 c.c., using a flask calibrated for both the hot and the cold solution. Before making the titration, rub down the sides of the dish above the liquid with a small quantity of distilled water free from chlorine, using a clean feather. Rinsing alone will not always dissolve the chlorides which adhere to the sides of the dish.

Notes.—For titration by this method the solution must be as nearly neutral as possible. If the water is alkaline to any extent, it should be neutralized with dilute sulphuric acid,

using phenolphthalein as an indicator. The solution will then contain alkali only as bicarbonate, which does not interfere with the titration. Acid water must be made neutral by the addition of sodium carbonate.

It is important that the process be carried out essentially as described, since it has been found that the results vary with the volume of solution in which the titration is made, the amount of chromate used, and the amount of precipitated silver chloride present.* A correction for volume can be made by means of the formula given by Hazen.

E. G. Smith † recommends titration in a volume of 100 c.c., making a correction of .1 c.c. more or less as found for the error due to dilution of the reagents.

Color is removed by agitation with milk of alumina as before described.

Determination of the Residue on Evaporation and the Loss on Ignition.—*Directions.*—Ignite and weigh a platinum dish. Measure into it 100 c.c. of the water (200 c.c. in the case of surface-waters), and evaporate to dryness on the water-bath. When the water is all evaporated heat the dish in the oven at the temperature of boiling water for two hours, then let it remain in a desiccator over sulphuric acid for several hours and weigh.‡ The increase in weight gives the "total solids" or "residue on evaporation." If from a ground-water, save the residue for the determination of the iron.

In the case of surface-waters the residue should be ignited and the loss on ignition noted. Heat the dish in a "radiator," which consists of another platinum dish enough larger to allow an air-space of about half an inch between the two dishes, the inner dish being supported by a triangle of platinum wire. Over the inner dish is suspended a disk of

---

* Hazen: *Am. Chem. Jour.*, **11** (*1889*), 409.

† *Trans. Wis. Acad. Sciences, Arts, and Letters*, Vol. XIII, 359.

‡ In some laboratories it is the practice to dry at 110° or 130° C.

platinum-foil to radiate back the heat into the dish. The larger platinum dish is heated to bright redness by a triple gas-burner. Heat the dish in the radiator until the residue is white or nearly so. Note any blackening or charring of the residue and any peculiar " burnt odor " which may be given off. After the dish has cooled, slightly moisten the residue with a few drops of distilled water to secure weighing under the same conditions. Heat the residue in the oven for half an hour; cool in a desiccator and weigh. This gives the weight of " fixed solids," the difference being the " loss on ignition."

Notes.—Before the introduction of modern methods of water-analysis the determination of " loss on ignition " was the only method for the estimation of organic matter in water. In order, however, that the determination shall possess any real value, it is necessary to regulate carefully the heat during the ignition, so as to destroy the organic matter without decomposing calcium carbonate or volatilizing the alkali chlorides.

This is what the use of the radiator is intended to accomplish, and in the case of surface-waters, with low mineral content and considerable organic matter, the method gives generally satisfactory results. But in the case of ground-waters having little or no organic matter and high mineral content the loss is often very great on account of the decomposition of nitrates and chlorides of the alkaline earths and the loss of water of crystallization. In waters of this class the determination of " loss on ignition " is, therefore, generally meaningless, although an approximation to the amount of organic matter can be obtained by the addition of sodium carbonate to the water before evaporating to dryness. By this means the alkaline earths are precipitated as carbonates, the chlorine and nitric acid are held by an alkaline base, and there is no water of crystallization in the residue. Even with this modification the loss is considerable when magnesium salts are present, owing to the loss of carbonic acid.

The *behavior* on ignition is oftentimes significant. Swampy or peaty waters give a brownish residue on evaporation to dryness, which blackens or chars, and this black substance burns off quite slowly. The odor of the charring is like that of charring wood or grain; sometimes sweetish, but not at all offensive. Waters much polluted by sewage blacken slightly; the black particles burn off quickly and the odor is disagreeable. Any observations on this point should be recorded in the report (p. 138) under the heading "Change on Ignition."

Determination of the Hardness.

1. *By Soap.—Clark's Method.*

Directions.—Measure 50 c.c. of water into a 200-c.c. clear glass-stoppered bottle and add the soap solution from the burette, two or three tenths of a cubic centimeter at a time, shaking well after each addition, until a lather is obtained which covers the entire surface of the liquid with the bottle lying on its side, and is permanent for five minutes. The number of parts of calcium carbonate corresponding to the volume of soap solution used is found in the table in Appendix A.

This will give the total hardness. If it is desired to find the permanent hardness also, dilute 50 c.c. of the water to about 200 c.c. and boil down to 50 c.c. in a beaker, cool and determine the hardness as before. This will give the permanent hardness, and the difference will be the temporary hardness.

Notes.—When potassium or sodium soap is added to water containing calcium and magnesium salts, the soap is decomposed, and insoluble compounds with the fatty acids are formed. The importance of adding the soap *in small quantities* cannot be too strongly emphasized, especially in the presence of magnesium compounds. The presence of mag-

nesium salts will be recognized by the peculiar curdy appearance of the precipitate formed and by the occurrence of a false end-point, the lather lasting about three minutes when the titration is about half done. If much carbonic acid be liberated, it is better to follow Dr. Clark's original directions and remove it by suction.

By reference to the table it will be observed that values are not given for more than 16 c.c. of the soap solution. If in any case the water under examination requires more than 10 c.c. of the standard soap solution, a smaller portion of 25 c.c., 10 c.c. or even 2 c.c., as the case may require, is measured out and made up to a volume of 50 c.c. with recently distilled water. If the volume of soap used is always about 7 c.c., this will keep the results comparable with each other, although the element of dilution introduces an error. Potable waters, in the eastern United States, at least, are rarely so high in mineral matter as to require excessive dilution. In the case of extremely hard waters, however, the acid method is to be preferred. Distilled water itself, containing no calcium salt whatever, requires the use of a considerable quantity of soap to produce a permanent lather. The cause for this seems to exist in the dissociation of the greater part of the soap at the extreme dilution to which it is subjected, and the slow accumulation of a sufficient quantity of undissociated soap to allow of the increase of surface tension to a point at which soap-bubbles will persist.

By the *temporary* hardness of water is meant the hardness which is removed by boiling. It is due to the carbonates of calcium and magnesium held in solution by the carbonic acid in the water, probably in the form of bicarbonates. *Permanent* hardness is that which is not removed by boiling. It is caused by the presence of soluble salts of calcium and magnesium, not carbonates, but chlorides and sulphates principally, held in solution by the solvent power of the water itself.

2. *By Acid.—Hehner's Method.*

Directions.—For the determination of the temporary hardness or "alkalinity," measure 100 c.c. of the water into a bottle such as is used for the soap test, and add 2.5 c.c. of the erythrosine indicator and 5 c.c. of chloroform. Mix well by shaking and add $\frac{N}{50}$ sulphuric acid from the burette in small quantities, shaking thoroughly after each addition. The pink color gradually grows lighter until the addition of a drop or two of the acid causes it to disappear entirely. Each tenth of a cubic centimeter of acid used represents one part of $CaCO_3$ in 1,000,000. Make a correction for the indicator by carrying out a blank determination with distilled water.

For the permanent hardness measure out 100 c.c. of the water and add to it more than enough $\frac{N}{50}$ sodium carbonate solution to decompose the calcium and magnesium chlorides, sulphates, and nitrates present. Generally 25 to 50 c.c. will be sufficient. Evaporate the mixture to dryness in a platinum or nickel dish and dissolve the residue in a little recently boiled distilled water. Filter through a small filter and titrate the filtrate and washings, made up to 100 c.c., with $\frac{N}{50}$ sulphuric acid, using erythrosine as indicator. The difference between the number of cubic centimeters of sodium carbonate used and the acid required for the residue will give the permanent hardness.

Notes.—This method is especially useful for waters which require clarification by alumina and subsequent filtration. Lacmoid and phenacetolin can also be used in the determination of the alkalinity, but they necessitate titration in a hot solution on account of their susceptibility to carbonic acid.

The use of chloroform is essential to secure a sharp end-point. The non-ionized erythrosine formed by the addition of the acid to its alkali salt is soluble in the aqueous solution with a slight rose color. It is, however, more soluble in the chloroform, and when it is thus removed as fast as formed the neutralization of the alkali becomes at once apparent.*

If a water contains sodium or potassium carbonate, there will not be any permanent hardness, and hence more acid will be required for the filtrate than corresponds to the amount of sodium carbonate added. From the excess the amount of sodium carbonate in the water may be determined. Any alkali carbonate present would be calculated as temporary hardness by the direct titration; hence it should be calculated to calcium carbonate and subtracted from the results found by the direct titration.

Determination of Phosphates.†—*Directions.*—Evaporate 50 c.c. of the water and 3 c.c. of nitric acid (sp. gr. 1.07) to dryness in a 3-inch porcelain dish on the water-bath. Heat the residue in an oven for two hours at the temperature of boiling water. Treat the dry residue with 50 c.c. of cold distilled water, added in several portions and poured into the comparison-tube. It is not necessary to filter the solution. Add 4 c.c. of ammonium molybdate (50 grams per liter) and 2 c.c. of nitric acid, mix the contents of the tube and compare the color, after three minutes, with standards made by diluting varying quantities of the standard phosphate solution (1 c.c. = 0.0001 gram P_2O_5) to 50 c.c. with distilled water and adding the reagents as above. Carry

* Ellms: *J. Am. Chem. Soc.*, 21 (*1899*), 359.

† Lepierre: *Bull. Soc. Chim.*, 15 (*1896*), 1213. Woodman and Cayvan: *J. Am. Chem. Soc.*, 23 (*1901*), 96. Woodman: *ibid.* (*1902*), 735.

out a blank determination on the distilled water used for dilution, especially if it has stood for any length of time in glass vessels.

Notes.—The method as described will be sufficient for ordinary work. If a more exact determination of the phosphate is required, a slight correction should be made in each case. For a table showing these corrections reference may be made to the paper by Woodman and Cayvan previously cited.

The evaporation and heating with nitric acid is for the purpose of removing silica, which gives with ammonium molybdate a yellow color similar to that given by phosphates.

The determination of phosphates in a drinking-water is a matter which has not received the attention from water analysts that has been given to the estimation of various other constituents. Any one who looks through the literature cannot help noticing how few are the published results of quantitative estimations of the phosphate content of natural waters, apart from mineral waters. Yet this determination, by reason of the conversion of organic phosphorus compounds into phosphates through the processes of decay, is one which might reasonably be expected to throw considerable light on the question of the pollution of natural waters by objectionable material.

The reasons for this dearth of published data are not far to seek. To be of value the amount of phosphate must be known within rather narrow limits. Qualitative tests are not sufficient. The mere presence of phosphates is by no means definite or even confirmatory evidence of organic pollution. Rocks and minerals containing phosphates are found nearly everywhere, and traces, at times even considerable quantities, may be dissolved, especially by waters

rich in carbonic acid. This, however, does not constitute a serious objection to the utility of the determination. The same is true of many if not most of the constituents upon which reliance is placed in judging of the quality of a water. Unpolluted waters often contain notable amounts of nitrates and chlorides, and a true judgment can be rendered only after comparison with samples from adjacent but unpolluted sources.

The chief reason, however, has been the lack of an accurate and simple method, sufficiently delicate, and of enough data to work out a standard for comparison.

This reason can hardly hold true now, for enough work has been done on the colorimetric method to indicate its value as another link (of which we have none too many, anyway) in the chain of circumstantial evidence by which we are often compelled to judge the purity of a water.

The amount of phosphate and its variation seem to follow the same general line as the other mineral constituents which either accompany the polluting material or are produced by its decay, especially the nitrates and chlorides. It is not, however, so delicate an indicator as these. In general it may be said that the amount (expressed as P_2O_5) in an unpolluted water will seldom be over 1.0 part per million.

Determination of Iron.*—*Directions.*—Evaporate 100 or 200 c.c. of the water to dryness in a platinum dish. (The weighed residue from the determination of total solids may be used if desired.) Treat the residue with 5 c.c. of hydrochloric acid (1 : 1), being careful to carry the acid to the edge of the dish. In some cases it may be necessary to heat the dish gently on the water-bath in order to bring all the iron

* Thomson: *J. Chem. Soc.*, 67 (*1885*), 493.

into solution. When all is dissolved with the exception of silica, rinse the solution into a 100-c.c. tube and make it up to about 50 c.c. with distilled water. Add a solution of potassium permanganate drop by drop until the solution remains pink for 10 minutes.

Meanwhile prepare a blank standard with 50 c.c. of distilled water and about a cubic centimeter of hydrochloric acid. Add 15 c.c. of potassium sulphocyanide solution to the waters and to the blank standard. Add the standard iron solution, in small quantities, .02 c.c. if necessary, from a capillary pipette, mixing thoroughly by pouring the solution back and forth from one tube to another after each addition, until the color of the standard matches that of the water. One cubic centimeter of the standard iron solution is equal to 0.0001 gram of Fe.

Notes.—In the case of some river-waters it will be found necessary to add a few cubic centimeters of hydrochloric acid to the water while evaporating, in order to facilitate the solution of the iron. This should be done on a separate portion from that used for the determination of total solids.

The colors should be matched immediately after adding the sulphocyanide, since the color fades appreciably on standing. The highest standard should not contain more than 3 c.c. of the iron solution, since the color then becomes too deep for accurate comparison.

Determination of the Dissolved Oxygen.

*Method of L. W. Winkler.**

Collection of Samples.—The samples are collected in glass-stoppered bottles of known capacity, holding about

* *Berichte,* 21 (*1888*), 2843.

250 cubic centimeters. When water is taken from a faucet the bottle is filled by means of a tube which passes to the bottom of the bottle. A considerable amount of water is allowed to pass through the bottle and overflow at the top. It will be almost impossible to obtain duplicate samples unless the bottles are filled at the same time by means of a T tube, owing to variations in pressure in the pipes.

In taking samples from a stream or pond, a stopper with two holes is used. A tube passing through one of these holes is sunk in the water to the desired depth, and the other is connected with a larger bottle of at least four times the capacity of the smaller one, and fitted in the same way. From the larger bottle the air is exhausted by the lungs or by an air-pump until it is nearly filled with water. Unless the determination is to be made at once, the rubber stopper of the smaller bottle is quickly replaced by the glass stopper so that no air is left in the bottle. The temperature of the water at the time of sampling should be noted.

The apparatus which has been used in connection with work in this laboratory for collecting samples at various depths down to 75 feet is shown in outline in Fig. 9. A galvanized-iron can of such size as to hold one of the gallon bottles is weighted with lead and provided with ears at the top for suspending. The bottle, which is securely wired in, is provided with a rubber stopper carrying two brass tubes, one ending just below the stopper and projecting for about 8 or 9 inches above it, the other extending to the bottom of the bottle and connected by heavy rubber tubing with the sample bottle. This is held by brass brackets, which are fastened by means of a wooden cleat to the side of the can. The neck of the bottle is put into the slot in the upper

bracket and then it is firmly clamped by the thumb-screw of the lower one. The arrangement of tubes in the sample bottle is obvious. In using the apparatus it is quickly

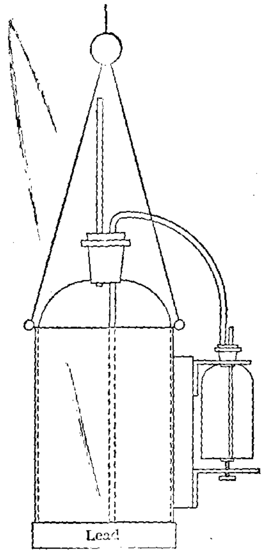

FIG. 9.

lowered to the desired depth by means of a rope marked off in feet. The water enters the sample bottle and flows through it into the other. When the bubbles cease to rise, indicating that the larger bottle is full, thus replacing the water in the sample bottle a number of times, the apparatus is drawn to the surface. The temperature is read from a thermometer fastened to the tube inside the gallon bottle.

The Determination.—Remove the stopper and add 2 c.c. of manganous sulphate solution with a pipette having a long capillary point reaching to the bottom of the bottle, and in the same way add 2 c.c. of the solution of sodium hydroxide and potassium iodide. Insert the glass stopper, leaving no bubbles of air, and mix the contents of the bottle.

Allow the precipitate to settle, and add 3 c.c. of strong hydrochloric acid with another pipette; add also one or two small glass beads and again insert the stopper. When the white portion of the precipitate is entirely dissolved, pour out a part of the solution into a flask, put back the stopper and shake the bottle vigorously. Then rinse out the contents of the bottle into the flask and titrate the liberated iodine with approximately $\frac{N}{50}$ sodium thiosulphate until the color becomes a faint yellow. Then add starch solution and titrate to the disappearance of the blue color. The first end-point should be taken, as the color will return on account of the reducing action of the organic matter present. Determine the exact normality of the thiosulphate solution by standardizing it against a solution of potassium bichromate (1 c.c. equals 0.001 gram iodine), as directed on page 196.

Calculation of the Results.—1 c.c. $\frac{N}{50}$ sodium thiosulphate $=0.11165$ c.c. oxygen at 0° and 760 mm. (This value would ordinarily be corrected for the barometric pressure, but the correction falls within the limits of experimental error.) Find the volume of oxygen by substitution in the following formula:

$$A = \frac{n \times 0.11165 \times 1000}{v} = \text{c.c. oxygen in 1000 c.c. of water,}$$

where $n =$ number of c.c. of exact $\frac{N}{50}$ thiosulphate, and $v =$ the volume of the bottle minus 4 c.c. (lost by addition of reagents). The results are reported in "per cent. of saturation," which is found by dividing A by the number of c.c. of oxygen taken up by 1000 c.c. of water when saturated at the given temperature. (See Winkler's table, Appendix A.)

For example, 15.2 c.c. $\frac{N}{50}$ thiosulphate were used to

titrate the iodine liberated by the oxygen in 265.5 c.c. of the water. Temperature of sample was 9° C. Then

$$A = \frac{15.2 \times 0.11165 \times 1000}{265.5 - 4}$$

$$= 6.491 \text{ c.c. oxygen in } 1000 \text{ c.c. of water.}$$

From the table, 1000 c.c. water at 9° C. dissolves 8.063 c.c. oxygen. Hence the "per cent. of saturation" $= \frac{6.491}{8.063}$ = 80.50 per cent.

Notes.—This determination is a good illustration of an indirect volumetric process. A precipitate of manganous hydroxide is formed in the bottle by the reaction of the manganous sulphate and the sodium hydroxide. This immediately combines with the oxygen in the water to form a certain amount of *manganic* hydroxide. The hydrochloric acid which is added reacts with the manganic hydroxide to form chlorine, which in turn liberates iodine from the potassium iodide, the amount thus set free depending primarily upon the quantity of oxygen dissolved in the water. The presence of considerable amounts of organic matter or of nitrites introduces an error. In such cases the method must be modified or a correction made. Details of the method used in such cases are given in the paper by Winkler previously cited.*

A correction is made for the volume of the reagents added, but since the precipitated hydroxides had settled before the acid was added, no allowance should be made for the amount of acid, since the water it displaces contains neither oxygen nor iodine.

Results are also expressed as cubic centimeters of oxygen per liter or as parts per million by weight. If a number of determinations are being made, the labor of calculation may be lessened by the use of logarithms, especially since $\frac{0.11165}{v}$

* See also Rideal and Stewart: *Analyst*, 26 (*1901*), 141.

is a constant for any particular bottle, and its logarithm may be recorded in a note-book or upon the bottle itself.

If water is collected in the ordinary way and transferred to the apparatus by pouring, there will inevitably be an absorption of oxygen unless the water is already saturated. Thus a process which gives excellent results when the water is nearly or quite saturated may fail entirely to give accurate results when the dissolved oxygen is low or absent. The water may be supersaturated with oxygen, in which case the per cent. of saturation may be more than one hundred.*

Determinations of dissolved oxygen in ponds and streams are best made on the spot, or at least the reagents should be added. The very simple apparatus required for the Winkler process can be packed in small space, and the entire determination requires only a few minutes. The absorption of the oxygen by the manganous hydroxide is complete almost at once, and it is unnecessary to allow it to settle for a long time before adding the acid. The titration can be made with a small burette or pipette with accurate results.

Determination of Free Carbonic Acid.—*Directions.*—Measure 100 c.c. of water into a 150-c.c. Erlenmeyer flask, add 10 drops of phenolphthalein solution and titrate with $\frac{N}{50}$ sodium carbonate solution until a faint permanent pink color is produced. Mix the solutions by rapidly whirling the flask, avoiding violent shaking. To obtain the exact value make a second titration, running in the sodium carbonate rapidly until near the end and then drop by drop until the exact point is reached. The pink color will disappear rather slowly near the end. One cubic centimeter of the sodium carbonate solution = 0.44 milligram of CO_2.

* Gill: *Tech. Quart.*, 5 (*1892*), 250.

Notes.—The reaction consists in the formation of acid sodium carbonate:

$$Na_2CO_3 + H_2O + CO_2 = 2NaHCO_3.$$

The acid carbonate does not give a pink color with phenolphthalein. Sodium hydroxide can also be used for the titration, but the sodium carbonate solution is preferable.

The carbonic acid may be present in the water in three forms: as "free carbonic acid," uncombined with any base; as "half-bound carbonic acid," combined indirectly with the bases in the form of bicarbonates; as "fixed carbonic acid" directly united to the bases, as in calcium and magnesium carbonates. Since it is the "free" and the "half-bound" carbonic acid that is expelled on heating the water, these two are often spoken of together as the "volatile" carbonic acid.

From the above determination of the free acid, together with the determination of alkalinity as described on page 117, the amount existing in the various forms may be shown. If the water is acid or neutral to phenolphthalein, the half-bound acid will equal the fixed as determined by the titration with $\frac{N}{50}$ acid and erythrosine. If, however, the water is alkaline to phenolphthalein, there is no free carbonic acid and the half-bound does not equal the fixed. In this case the fixed acid is first determined, and from this is deducted an amount of carbonic acid equivalent to twice the acid required to discharge the pink color produced by phenolphthalein. The difference is the half-bound carbonic acid.

Determination of the Color.—The amount of color is generally determined by direct comparison of the water with some definite standard of color. Various standards of color have been proposed, the objection to most of them being

that they are not sufficiently general in their application, being adapted only for the color of some particular class of waters.

Nesslerized Ammonia Standards.—The yellowish-brown tint of the surface-waters of the Atlantic watershed corresponds, except in the lowest grades, very closely to that of nesslerized ammonia, so that the standards for reading ammonia can be used also for the determination of the color. The comparison is made in the same kind of 50-c.c. tubes that are used for the ammonia determinations, but the tubes used for this purpose are kept separate from those used for the ammonia, since the least amount of alkali remaining in a tube (from imperfect washing, for instance) alters the color of the water. The scale used corresponds quite closely with the amount of the standard ammonium chloride solution in the standards. Thus a color of 1.0 is nearly the same as that produced by the nesslerization of 1 c.c. of the standard ammonia; 0.1 is about the color produced with 0.1 c.c. of the ammonia solution. In the higher grades of color, above 1.0 or 2.0, the tint varies considerably from that of the nesslerized ammonia, and the degree of color is then better determined in wider tubes and in less depth.

The degree of correspondence of the ammonia standards with the natural waters is dependent largely upon the sensitiveness of the Nessler's reagent, a solution which is so sensitive as to precipitate in two hours, matching the colors more closely than one which will remain for twenty-four hours. This is perhaps due to the reddish tinge given to the solution by the incipient precipitation of the mercuric iodide.

Natural Water Standards.—To avoid these variations in color, standards made from dark-colored water from swamps by various degrees of dilution, and verified by direct com-

parison with suitably prepared nesslerized ammonia standards, are used. They have the same hue as the waters to be matched, as well as a degree of turbidity which corresponds well with that of surface-waters; once prepared, they will keep for a fairly long time if protected from the light and from the dust. These are the standards that are in use in this laboratory. They are periodically standardized by comparison with the permanent glasses of a Lovibond Tintometer.

Platinum Standards.—For ground-waters which have only very little color and considerable hardness, and for filtered waters, the platinum color standards are convenient.* According to this scale, the color of a water is the amount of platinum in parts per ten thousand, which, together with enough cobalt to match the tint, must be dissolved to produce an equal color in distilled water. In practice, a standard having a color of 5.00 is prepared by dissolving 1.246 grams of potassium platinic chloride (equivalent to .5 gram platinum), 1.000 gram of cobalt chloride (equivalent to .25 gram cobalt), and 100 c.c. of strong hydrochloric acid in distilled water and diluting to one liter.

Dilute standards for use are made by diluting varying amounts of this standard to 50 c.c. with distilled water. Thus, by diluting 1 c.c., 2 c.c., and 3 c.c. to 50 c.c., colors of 0.1, 0.2, and 0.3 are obtained. It is claimed that the platinum standards are permanent if protected from the dust.

Iodine Standards.—A standard for color which could be made up at the moment when wanted and without the use of costly apparatus would be a desideratum. Experiments made in this laboratory indicate that an aqueous solution containing a definite weight of iodine offers the best solution of the problem. Owing, however, to the volatility of iodine even in dilute aqueous solution it is better to liberate it directly in

* Hazen: *Am. Chem. J.*, 14 (*1892*), 300.

the comparison-tube itself. For this the following solutions are required: Potassium iodide, 0.1 gram per liter; potassium bichromate, 0.09 gram per liter; picric acid, 0.2 gram per liter.

For a color of 5.0, 50 c.c. each of the iodide and of the bichromate solutions are used; for lower colors proportional amounts are taken and diluted to 100 c.c. with distilled water. To each tube is added 1 c.c. of the picric acid solution, and just before the colors are to be matched add 2 c.c. of strong sulphuric acid. The color develops, as in the case of nesslerized ammonia, within ten minutes and can be relied upon for about half an hour. A very slight milkiness aids in matching the color; a great hindrance to the use of metallic solutions being their clearness or brightness as compared with natural waters.

The comparison-tubes which give the most satisfactory results with colors from 5.0 to 0.5 on the natural water scale are $^{15}/_{16}$ inch wide and $9^{1}/_{4}$ inches high to the 100-c.c. mark, For lower colors, narrower tubes, $^{11}/_{16}$ inch diameter and the same depth, give closer readings.

Determination of the Odor.—*Cold.*—Shake violently the sample in one of the large collecting-bottles when it is about half or two-thirds full, then remove the stopper and quickly put the nose to the mouth of the bottle. Note the character and degree of intensity of the odor, if any. An odor can often be detected in this way which would be entirely inappreciable if the water were poured into a tumbler.

Hot.—Pour into a beaker about five inches high enough water to one-third fill it. Cover the beaker with a well-fitting watch-glass and place it on an iron plate which has been previously heated, so that the water shall quickly come to a boil. When the air-bubbles have all been driven off and the water is about to boil, take the beaker from the plate and allow it to cool for about five minutes. Then shake it with a rotary

movement, slip the watch-glass to one side and put the nose into the beaker. Note the odor as before. The odor may or may not be the same as that of the water when cold; it can be perceived, as a rule, for only an instant.

Notes.—It is inevitable that a certain personal equation should influence this test. Each laboratory will have its own standards for routine work, but a certain familiarity with the more common odors will tend to allay public anxiety and to aid in a more watchful habit on the part of consumers. Good ground-waters do not give distinct odors unless they are derived from clayey soil, but the odor often betrays a contaminated well more surely than any other test. Surface-waters will nearly always yield a characteristic odor. This odor may be due to the organic matter contained in the water, or to the presence of minute plants or animal organisms.

Among the odors which are frequently met are the "earthy," "vegetable," "musty," "mouldy," "disagreeable," and "offensive." The "earthy" odor is that of freshly turned clayey soil. "Vegetable" is the odor of many normal colored surface-waters; it may be described as swampy or marshy, pond-like, and is often strengthened by heating. "Musty" can be likened to the odor of damp straw from stables; it is fairly characteristic of sewage contamination, and by the trained observer is distinctly distinguishable from the mouldy odor. "Mouldy" is the odor of upturned garden or forest mould, or of a moist hot-house; it is somewhat allied to the earthy odor. "Disagreeable" is a term which is capable of wide variation among different observers. It may include certain characteristic odors which are peculiar to the growth or decay of certain organisms, as the "pigpen" odor of *Anabæna*, the "fishy" or "cucumber" odor of *Synura*, etc. The term "offensive" is generally reserved for the sewages. These terms can be taken only as broad illustrations of the character of the particular odor,

since the odor will very likely be described by different persons in different ways, and each laboratory will have its own characterization. The odor which often accompanies an abundant development of diatoms is a good illustration of this. It will be called by various inexperienced observers offensive, rotten, fishy, geranium-like, aromatic, in one and the same sample of water.

The terms generally used to signify the degree of intensity of the odor are "very faint," "faint," "distinct," and "decided." The exact value to be placed on each of these terms will, as a matter of course, vary with the individual analyst, but in a general way it may be said that the "very faint" odor is one that would not be detected except by the trained observer; the "faint" odor would be recognized by the ordinary consumer if his attention were called to it; the "distinct" odor is one that would be readily noticed by the average consumer, but would not interfere with the use of the water; while the "decided" odor is one which would, in all probability, render the use of the water unpleasant.

Biological Examination.—The close relation of the odor to the living fauna and flora of the water makes it desirable that the chemist shall be able to recognize the more common forms of water plants and animals even if he makes no pretensions to a knowledge of cryptogamic botany or of zoology. Therefore a microscope and a concentration apparatus should be in every water-laboratory. A full description will be found in Whipple.*

The bacteriological examination belongs to the expert rather than to the student, certainly in the present state of our knowledge of the lower organisms. It may be desirable for the student to be familiar with the simpler methods of plate and tube culture, and the water-works laboratory should, as in the above case, be provided with means for plain

* "Microscopy of Drinking-water." N. Y., Wiley, 1899.

number counts, and directions for avoiding errors due to variations in temperature, time of culture, etc., consult Frankland's "Micro-organisms in Water"; "Manual of Bacteriology," Muir and Ritchie; "Water Bacteriology," Prescott and Winslow.

Determination of the Turbidity and Sediment.—The suspended matter remaining in the water after it has rested quietly in the collecting-bottle for twelve hours, or more, is called its turbidity, and that which has settled to the bottom of the bottle, its sediment.

Good ground-waters are often entirely free from turbidity and sediment, the suspended matters having been filtered out during the subterranean passage of the water, but this is rarely true of surface-waters. The turbidity is various in character and amount, sometimes milky from clay or ferrous iron in solution; usually it consists of fine particles, generally living algæ or infusoria. These often collect on the side toward or from the light, and a practised eye can, not infrequently, recognize their forms. Some of the lower animal forms can also be seen by the naked eye, and the larger Entomostraca are quite noticeable in many waters.

The sediment may be earthy or flocculent; in the latter case it is generally *débris* of organic matter of various kinds. The degree of turbidity is expressed by the terms "very slight," "slight," "distinct," and "decided," and the degree of sediment by "very slight," "slight," "considerable," and "heavy." These determinations, again, are of value only to the routine worker, and for him there are various methods in use. The papers of Parmelee and Ellms * and of Whipple and Jackson † should be consulted for a description of these.

Permanent standards, however desirable for a routine laboratory where many samples are tested daily, are not very reliable for students' work where the tests are made

* *Tech. Quart.*, 12 (*1899*), 145. † *Ibid.*, 283.

only at intervals and for educational rather than technical purposes.

Determination of Alum.—On account of the use of alum or aluminum sulphate as a coagulant in the filtration of water, a determination of alumina in the effluent water is often necessary. This may be readily made by the logwood test.*

Directions.—The logwood solution is made as follows: Take two grams of logwood chips and boil one minute in a platinum dish with 50 c.c. of distilled water. Decant the solution and boil again for one minute with 50 c.c. of water. Decant this and similarly boil a third time with 50 c.c. of water. Decant this into a platinum receptacle for use. Take three drops for each test. Kept in platinum, the solution will last for several days at least.

Test the water as follows: Boil 50 c.c. of the water in a platinum dish for a short time to expel carbon dioxide. Add three drops of the logwood solution and continue boiling for a few seconds to develop the color. Decant into a glass flask and cool quickly under the tap (so as not to keep the hot solution too long in the glass). Transfer to a No. 2 beaker and blow in carbon dioxide from the breath by means of a glass tube until there is no further decolorization. Pour the water into a Nessler tube for comparison with standards similarly prepared. Allow them to stand several hours before taking the final reading. No wash-water is used at any of the decantations. The test shows one part of aluminum sulphate in 8,000,000 parts of water.

A blank made with distilled water, if not completely decolorized by the CO_2, will show a tint perceptibly fainter

---

* E. H. Richards: *Tech. Quart.*, 4 (*1891*), 194. A. H. Low, *Tech. Quart.*, 15 (*1902*), 351.

than that produced by one part in 8,000,000 of aluminum sulphate.

It should be noted that carbon dioxide must be kept absent until the point prescribed. The solution is therefore transferred to a beaker in order to keep the flask free from carbon dioxide for the next test.

The main points are:

1. Any kind of logwood appears to answer.

2. The solution is good for several days, at least, if kept in platinum.

3. The use of platinum instead of glass for boiling the test.

4. The use of carbon dioxide instead of acetic acid.

Aluminum hydrate, as pointed out by the late Professor A. R. Leeds in 1893, will produce a tint almost as strong as if it were in solution, but of a distinctly differing tint.

Mr. Low's method of procedure is as follows: First, test the water as above described. If no tint, or none exceeding that of the blank, remains after standing several hours or over night, that is sufficient. If, however, a tint persists, or a colored precipitate settles out, it is necessary to determine if this is due to aluminum hydrate. Pour a sample of the water several times through a double Swedish filter, and finally test the filtrate. If the tint produced is weaker than that given by the unfiltered water, repeat the operation on a fresh portion of the water, using the same filter, and continue repeating with new portions of the water and always using the same filter, until it is apparent that no further diminution of the tint can be effected.

For a less delicate test in school laboratories where platinum is not available, the following alternative method may be used:

Dissolve about 0.1 gram pure hæmatoxylin in 25 c.c. water; this solution will keep for two weeks and works best

after being made several hours. To 50 c.c. of the water, placed in a four-inch porcelain dish, add two drops of the hæmatoxylin solution, allow the solution to stand for one or two minutes, then add a drop of 20 per cent. acetic acid. The standards are prepared at the same time, using 50 c.c. of distilled water and the required amount of a standard alum solution. The comparison must be made immediately, since the color fades on standing. In this way the presence of one part of aluminum sulphate in five million can be determined directly in the water and with ease.

Logwood may be used instead of the hæmatoxylin, the solution being prepared as above.

Notes.—This test will show the presence of all soluble salts of aluminum which enter into combination with the coloring matter of the logwood to form a "lake."

The alkalies and alkaline earths give a purplish color with logwood extract, hence the test for alum can be made only in acid solution.

Determination of Lead.—Lead in the minute quantities in which it ordinarily occurs in water is best estimated by comparing the color of the sulphide with standards.

Directions.—If the water is colorless, acidify the clear solution, concentrated if need be, with two or three drops of acetic acid, and pass in hydrogen sulphide to saturation. If a color is produced, compare it in a 100-c.c. tube with the color given by varying quantities of a standard lead solution.

If the water is too highly colored to estimate the lead directly, evaporate three or four liters in a porcelain dish to about 25 c.c., add 10 c.c. of ammonium chloride solution and a considerable excess of strong ammonia. Then add hydrogen sulphide water and allow the dish to stand some hours. Boil the contents of the dish for a few moments to expel the

excess of hydrogen sulphide, and filter. The precipitate contains all the lead, iron, and suspended organic matter, also copper and zinc if present, while the soluble color goes into the filtrate. Wash once with hot water, transfer the filter to the original dish, and dissolve the sulphides by boiling with dilute nitric acid (1 part acid, sp. gr. 1.2, to 5 parts water). Filter and wash; evaporate to 10–15 c.c., cool, add 5 c.c. concentrated sulphuric acid and evaporate until copious fumes are given off. Then, if the original water contained less than 0.25 part iron per million, add acetic acid and ammonia, boil, filter, and read the amount of lead in the alkaline filtrate, making the standards (page 111) also alkaline with ammonia.

If the water contained over .25 part iron, wash the lead sulphate into a beaker with alcohol and water, and let it settle overnight. Filter, wash free from iron with 50 per cent. alcohol, dissolve the precipitate by boiling with ammonium acetate, filter, and determine the lead as above.

Note.—If more than .25 part of iron is present, some of the lead will be held by the precipitated ferric hydroxide; and if 25 parts are present, all of the lead may be lost in this way; hence the modification of the method in the presence of considerable quantities of iron.*

When copper is also present it is detected by the blue color given to the ammoniacal filtrate from the iron precipitation.

Statement of Results.—In reporting water analyses the results are best expressed in milligrams per liter, which for the majority of waters is equivalent to "parts per million." Occasionally it may be desirable to express the results in "grains per gallon." Parts per million may be converted into grains per U. S. gallon by multiplying by 0.058. For con-

* Ann. Rep. State Bd. Health, Mass., 1898, 577.

venience the results should be arranged in tabular form, such an arrangement being suggested below:

SANITARY WATER-ANALYSIS.

(Parts per 1,000,000.)

No.	Date.	Physical.					Residue on Evaporation.			
		Color.	Turb.	Sed.	Odor.		Total.	Loss.	Fixed.	Change on Ignition.
					Cold.	Hot.				
121	3-9-'00	.50	Dec.	Cons.	None	F. Veg.	42.5	12.5	30.0	Slight black
122	"	0.0	None	None	"	None	64.0	....	....	....
123	"	0.0	"	"	"	"	9740.0	......	....	....

No.	Nitrogen as							Ox. Cons.
	Total Organic.	Alb. Ammonia.			Free Am.	Nitrite.	Nitrate.	
		Total.	Sol.	Susp.				
121	.598	.306	.170	.136	.056	.003	.220	4.83
122	....	.014	....	....	.000	.000	1.40	.41
123	....	.032	....	....	.560	.003	1.14	3.23

No.	Hardness	Chlorine as Chlorides.	Iron.	Biological (per c.c.)				
				Bac.	Plants.			Animals.
					Diatoms.	Cyanophyceæ.	Algæ.	
121	20.0	1.8	....	....	1	0	0	229
122	23.0	6.3	.01	....	....	....	....	....
123	560.0	1198.0	.46	....	....	....	....	....

No. 121 is from a pond; 122 from a spring; 123 from an artesian well.

CHAPTER VIII.

FOOD IN RELATION TO HUMAN LIFE: COMPOSITION, SOURCES DIETARIES.

Paracelsus (1493–1541) taught that "the object of chemistry is not to make gold, but to prepare medicines." Van Helmont (1577) recognized water as a chief constituent of all living matter. Sylvius (1614) taught that combustion and respiration were precisely similar phenomena. The modern revival of chemistry has been largely due to efforts to preserve health. These efforts are turned more and more to the attainment of a high degree of daily efficiency instead of toward curing already established disease. Life itself is conditioned on the food-supply. Wholesome food is a necessity for productive life. Man can and does exist on very unsuitable, even more or less poisonous, food, but it is merely *existence* and not effective life. This is true not only of the wage-earner, but of the business-man, the professional man, the scholar. To be well, to be able to do a day's work, is man's birthright. Nevertheless a too large proportion of the American people sells this most valuable possession for a mess of pottage which pleases the palate for three minutes and weights the digestive organs for three hours. With no other known source of bodily energy, the student cannot afford to use up the capital in his bank lest he find the account overdrawn before middle age. With no hope of entirely banishing evil microbes from the haunts of men, it behooves each one to so nourish his body that the enemy can find no point of attack.

The watchword of the State is prevention of disease; that of the individual is personal resistance. The economic and social conditions of daily life have reached such a stage of development as to make a closer study of food-materials, for which half the cost of living is spent, not only desirable but imperative. With the products of the world exposed in our markets, the restraints of a restricted choice, as well as inherited instincts or traditions, lose their force. The buyer, unless he has actual knowledge to guide him, is swayed by the caprices of the moment or the condition of his purse, and often fails to secure adequate return in nutritive value for the money paid.

The fact that so much *manipulated* material is put upon the market renders this choice of food doubly difficult, since the appearance of the original article is often entirely lost, and to city-bred buyers even the natural product conveys little idea of its money value. It therefore seems necessary that an elementary knowledge of the proximate composition and food value of the more common edible substances should be recognized as an essential part of education. Chemistry is now found in the curricula of nearly all institutions devoted to higher education, so that it is possible, as it was not ten or twenty years since, to bring to students both the theoretical and the practical bearing of a study of food-materials in an instructive and practical manner. No branch of Sanitary Chemistry can yield more far-reaching results in the welfare of the community, since the more widely this knowledge of the composition of foodstuffs is disseminated the less danger to health and purse from the sophistications of unscrupulous dealers.

True, the subject is not yet in that condition in which there is nothing more to learn. It cannot be taught in a dogmatic manner. No hard-and-fast rules can be given

either as to the quantity or the quality of the daily diet, but enough is known to enable us to make life of more value, to lessen the suffering due to disease, and, consequently, to lower the death-rate and increase the productive power of the community.

Attention must be called to this relation of food to health if the delicacy of constitution due to civilized habits is to be overcome and the lives of useful citizens prolonged. Men otherwise sane are most reckless where food is concerned. Even noted authorities on sanitation have succumbed to disease because the proper balance of nutrition and exercise was neglected. The physician is to a great extent powerless, for if his advice displeases he is dismissed. It remains for the school to educate the young student, and as usual the higher education must begin the work and the college professor must set the example of a living plain enough to be consistent with clear thinking. There need be no apology, therefore, for the introduction of such a "practical" subject into any college curriculum. There is plenty of theory behind it and much educational value in both methods and reasoning.

Definition of Food.—Food is that which builds up the body and furnishes energy for its activities: that which brings within reach of the living cells which form the tissues the elements which they need for life and growth. Only such available substances can be called food, no matter what their chemical composition may be. Soft coal contains carbon and hydrogen and is food for the furnace, but is not available for the animal body.

If for any reason a portion of the digestive tract is diseased, substances which under normal conditions would be food may not be nutritious.

The nutritive value of a food depends upon the quantity of

its ingredients which under normal conditions may be useful to the human organism. The term is not confined to any one class of food principles, as is commonly the case in newspaper articles, in which it is often stated, for example, that white flour and rice have very little nutritive value.

We determine what chemical elements enter into the composition of the body by an analysis of the various organs and tissues. We learn what combinations of these elements serve as food by determining those present in mother's milk and in foodstuffs which experience has proved to furnish perfect nutrition. From these studies it is apparent that about fifteen chemical elements are constant constituents of the human body; that about a thousand natural products are known to have food value; that of these, one hundred are of world-wide importance (see table, page 130), and that ten of them form nine-tenths of the food of the world.

Food Principles.—While the foodstuffs present great variety, the food principles may be grouped under four headings; viz., nitrogenous substances or proteids, fats, carbohydrates, and mineral salts. Each group contains many members with minor but often essential differences. To make these substances available, there is needed an ample supply of air and of water,—of water for solution and circulation, of air for the oxygen needed to liberate the stored energy of the food in the place where it will accomplish its purpose.

Nitrogenous Substances.—Since, in some way as yet unknown to us, nitrogen is essential to living matter, such substances as contain this element in an available form are of the first importance. Some, as albumen, are so closely allied to human protoplasm that probably they need only to be dissolved to be at once assimilated. Others, as gluten and similar vegetable products, undergo a greater change; while still others, as gelatine, have a less profound but marked effect in

protecting the tissues from waste. Still other nitrogenous substances, as the alkaloids, seem to affect the *nerve*-tissues for good or ill.

The enzymes, "ferments," in part, of the older nomenclature, are also highly nitrogenous substances present in some form in nearly all foodstuffs of natural origin. The nearer the composition of the food approaches that of the protoplasmic proteid, presumably the greater its food value, since each cleavage, each hydrolysis, each step in the breaking down of the highly complex molecule, consisting of hundreds of atoms, is supposed to liberate the stored energy. Therefore it is not a matter of indifference in what form this essential is taken. So little is known, however, with scientific accuracy that students will find a fruitful field of research along these lines of investigation. Also together with this element, nitrogen, go others, in small quantity to be sure, but evidently of great value. Such are sulphur, iron, phosphorus. One difference between the several groups of proteids is seen in this combination with the metallic elements which seems to carry with it certain effects. Until greater progress has been made in determining the availability in the organism of the various known substances, we must be content with a wide margin in the calculated quantities necessary for the daily efficiency, except in the very few instances of nearly pure substances, as white of egg. It is evident also that the manner of preparation and the kind of mixtures used in food will affect most profoundly so unstable and complex a class of substances, and that only very general conclusions can be drawn from the work done as yet. One thing is certain, that the body cannot take nitrogen from that which does not contain it. Therefore a certain quantity of highly nitrogenous food should form a portion of the daily supply. It is usually held that the body seems to be sufficiently nourished when the food contains

an amount of digestible proteid equivalent to about 100 grams of dry albumen per day for the average adult, although recent work has shown that this figure is probably too high. An excess appears to have a stimulating effect and overloads the system with the waste, since the end-products are not purely mineralized substances, as are carbon dioxide and water from the carbohydrates, but are compounds of an organic nature, as creatin, urea, and uric acid, which have deleterious effects when accumulated in the system. A deficiency of nitrogen is made good, to a limited extent, by the protective agency of the other foodstuffs which offer themselves for all the offices except the final one of tissue-building.

Fats.—For this protective action, as well as for many other purposes, the fats are most valuable, and if they occur in about the same proportion as do the nitrogenous elements, the needs of the organism seem to be well met. Thus, in mother's milk, in eggs, and in meat from active animals these two are in nearly equal proportions, while in the cereals the fat is less; in nuts and in meat from fattened animals, as a rule, it is higher than the nitrogen. Little is known as to the varying food value of these fats from different sources. Certain physical conditions of solidity, melting-point, etc., seem to have more influence than mere chemical composition. Whatever the source, it is certain that the stored-up energy which is to serve the organism in cases of loss of income from any cause is in the form of fat, a form which is not subject to the action of agents which so readily decompose proteids and carbohydrates and yet is readily converted into available food whenever called for. That it is not absolutely necessary that the food should contain fat as such seems to be proved by experiment, but from the fact that all nearly natural food-substances do contain it, and that it appears to be more economical of human energy to take it from these foods than

to manufacture it from the proteids and carbohydrates, we may safely assume fat to be an essential of the human dietary.

That the equality in amount of fat with nitrogenous compounds is not essential is proved by the fact that the strong draft animals, as horses and oxen, take food in which the per cent. of fat is not more than half as much as of proteid; nevertheless it is present in the food of all animals and doubtless, in its turn, is protected by an excess of the third class of foodstuffs, the carbohydrates, characteristic of the vegetable kingdom—a class which in the final decomposition yield clean volatile products, water and carbon dioxide, and which, therefore, do not clog the system so readily as do urea and other wastes.

Carbohydrates.—The number of more or less well-defined substances under this head is legion: starches from scores of plants, sugars from as many more, gums, pectins, and dextrins, all with a certain food value, dependent probably upon the utilization of the various mixtures with which they are taken into the alimentary canal. These foodstuffs are very liable to "fermentation," that is, to an acid decomposition which prevents their absorption by the delicate lining of the walls of the intestines and which causes digestive disturbance. The sugars, which are very soluble, and therefore liable to be present in excess, are especially subject to this change. This class of food-substances is found in the diet of civilized man, free to choose, in an amount about equal to the sum of the other two classes, with a tendency to less rather than more. It may be said that sugar and fat increase over starch in the diet of a people of unrestricted choice, but it is not certain that the qualities of body which make for hardihood and resistance to disease are correspondingly increased. There is, indeed, much evidence to show that power of digesting vegetable foods indicates a general well-being of body conducive to long life. A

ready adaptation renders possible the changes of habitat required by civilization. Unless one is to be confined to a narrow range it is wise to cultivate a strength of digestion as well as a strength of muscle, and for the best brain power we believe it to be more essential.

Mineral Salts.—The fourth class, mineral salts, comes into the food largely from the vegetable substances eaten, for in these the union is an organic one readily assimilated. As we have seen, certain elements go with the nitrogenous portion, as, for example, in gluten and its congeners are found sulphur and phosphorus. Potassium, found in barley, is a constant constituent of protoplasm, while sodium is found in blood-serum. A lack of vegetable foods seems to impoverish the blood-corpuscles. For children, a deficiency in lime causes serious disease. Sugar, olive-oil, corn-starch, and other prepared food-substances cannot take the place of asparagus, cabbage, carrots, etc.

Heat of Combustion.—Until a more definite knowledge of the processes of metabolism (the transformations of matter and energy in the animal organism) is obtained the potential energy of food is calculated in terms of mechanical work—expressed in heat-units or calories.

One Calorie (1000 calories) is that amount of heat which is required to raise the temperature of one kilogram of water one degree centigrade, and if expressed in terms of mechanical work would enable one ton to be lifted 1.53 feet. For example: one gram of fat burned under a steam-boiler would yield, if the heat were completely utilized, 9.3 Calories, and raise one ton 14.2 feet; 100 grams would yield 930 Calories and raise one ton 1423 feet.

One gram of proteid or of carbohydrate is usually reckoned as yielding only 4.1 Calories. 480 grams would yield 1968 Calories and raise one ton 3011 feet. A day's ration is frequently estimated as 100 grams fat + 480 grams

of proteid and carbohydrates, and if completely converted into mechanical work would yield that amount of energy which would suffice to raise 156 pounds (taken as the weight of the average human body) 56,755 feet. But a portion of this energy is used up in chemical processes, a portion in physical changes, and a portion is undoubtedly wasted; a portion of the food may be of no use or even detrimental to the body, so that not more than one-third of this work can be counted as available. Hence 18,918 feet may be counted as a theoretical day's work in mountain-climbing.

The fact remains, however, that all experiments yet made go to show that within practical limits we are safe in using the heat of combustion (expressed in Calories) of any food-substance as a controlling measure of food values. The requisite number of Calories must, however, be obtained by the utilization of such substances as contain all the elements needed by the body, and in such ratio as has been found available for the balance of nutrition. In carrying on its multifarious activities the body loses about 20 grams of nitrogen per day, which must be replaced by the same element in the food taken. Thus while the requisite number of Calories may be furnished by fat or starch, these substances alone will not suffice for complete nutrition. The nutritive ratio, or the proportion of nitrogenous to non-nitrogenous food, must be maintained in the proportion of 1 to 3, or at least 1 to 5.

The following table of one hundred common food-materials is arranged in the order of calorific or energy-giving power, but in considering the food value of any one substance its nitrogen content must also be considered, and such combinations made as will yield the requisite elements for a well-balanced ration.

From even a cursory examination of the table it will be seen how widely some of the foodstuffs differ under differing conditions of soil moisture, fertilization in the case of plants,

COMPOSITION OF SOME COMMON FOOD-MATERIALS AS PURCHASED.

I. Fuel Value 3000–4000 Calories per Pound.

Food-material.	Refuse.	Water.	Nitrogenous Substances.	Fat.	Carbohydrates.
	Per cent.	Per cent.	Per cent.	Per cent.	Per cent.
Butter	....	11.0	1.0	85.0	....
Lard (refined)	....	....	....	100.00	....
Oleomargarine	....	9.5	1.2	83.0	....
Salt fat pork	....	0.3 to 12.2	0.2 to 5.0	80.3 to 94.1	....
Suet	....	4.3 to 21.9	1.1 to 7.5	70.7 to 94.5	....
Walnuts (shelled)	....	2.5	16.6	63.4	16.1

II. Fuel Value 2000–3000 Calories per Pound.

Food-material.	Refuse.	Water.	Nitrogenous Substances.	Fat.	Carbohydrates.
Bacon	8.7	18.4	9.5	59.4	....
Cheese (American pale)	....	31.6	28.8	35.9	0.3
Chocolate	....	1.5 to 10.3	12.5 to 13.4	47.1 to 50.2	26.8 to 33.8
Doughnuts	....	11.0 to 25.8	5.1 to 7.6	16.4 to 25.7	45.8 to 63.2
Mutton flank (fat)	....	28.9	10.7	59.8	....
Peanut butter	....	2.1	29.3	46.5	17.1
Sausage (farmer)	3.9	22.2	27.9	40.4	....

III. Fuel Value 1500–2000 Calories per Pound.

Food-material.	Refuse.	Water.	Nitrogenous Substances.	Fat.	Carbohydrates.
Barley (pearled)	....	9.8 to 12.9	7.0 to 10.1	0.7 to 1.5	77.3 to 78.1*
Beans (dried)	....	9.6 to 15.5	19.9 to 26.6	1.4 to 3.1	57.2 to 63.5*
Cake average (except fruit)	....	19.9	6.3	9.0	63.3
Candy	....	4.0	....	....	96.0
Cheese (Neuchatel)	....	42.7 to 57.2	15.1 to 22.3	22.3 to 32.5	0.2 to 2.9
Corn-meal	....	8.8 to 17.9	6.7 to 11.6	1.0 to 5.3	68.4 to 80.6*
Corn-starch	....	10.0	....	....	90.0*
Crackers (average)	....	6.8	10.7	8.8	71.9*
Fat meats	11.7	38.3	13.0	36.8	....
Gelatin	....	13.6	84.2	0.1	....
Ham (smoked, medium fat)	4.5 to 28.4	27.3 to 42.5	10.2 to 21.9	24.5 to 39.9	....
Infants' and invalids' foods	....	2.4 to 12.3	2.0 to 22.5	0.3 to 10.9	66.9 to 89.4
Macaroni	....	7.0 to 12.3	7.9 to 16.6	0.0 to 4.9	67.2 to 78.4*
Oats	....	7.8	16.5	7.3	66.5*
Peanuts	24.5	6.9	19.5	29.1	18.5
Peas (dried)	....	6.9 to 15.0	20.4 to 28.0	0.8 to 1.3	58.0 to 67.4*
Pop-corn	....	4.3	10.7	5.0	78.7
Rice	....	9.1 to 14.0	5.9 to 11.3	0.1 to 0.7	75.4 to 81.9*
Rye flour	....	11.9 to 13.6	4.9 to 8.8	0.2 to 1.3	77.6 to 80.2*
Sugar (granulated)	....	....	....	....	100
Wheat (entire) flour	....	6.4 to 13.1	12.2 to 14.6	1.5 to 2.1	69.5 to 77.0*
Wheat flour (white bakers')	....	10.1 to 13.3	10.3 to 14.9	1.9 to 2.0	70.3 to 75.5
Wheat (shredded)	....	7.2 to 10.7	9.6 to 11.4	1.3 to 1.6	75.0 to 79.7*
Zwieback	....	5.0 to 7.7	8.6 to 11.7	8.1 to 11.3	72.1 to 74.2

* Including fibre.

IV. Fuel Value 1000–1500 Calories per Pound.

Food-material.	Refuse.	Water.	Nitrogenous Substances.	Fat.	Carbohydrates.
Apples (dried)	....	8.6 to 47.4	1.2 to 2.5	0.1 to 5.0	48.6 to 86.91
Bread (white)	....	35.3	9.2	1.3	53.1
Corn-bread	....	28.4 to 48.0	6.5 to 10.1	2.3 to 9.8	40.3 to 54.3
Dates	10.0	13.8	1.9	2.5	70.6
Figs	....	11.6 to 25.0	2.6 to 5.7	0.3	68.3 to 83.1
Fresh pork (ribs and shoulder)	15.9 to 20.3	40.1 to 43.6	13.7 to 14.5	25.4 to 25.6	....
Medium fat mutton and beef	14.4 to 27.8	38.0 to 44.9	11.4 to 12.9	19.8 to 31.2	....
Mince-meat (commercial)	....	27.7	6.7	1.4	60.2
Mince-meat (home-made)	....	54.4	4.8	6.7	32.1
Pies	....	44.9	4.4	9.4	39.2
Prunes (dried)	15.0	19.0	1.8	....	62.2
Raisins	10.0	13.1	2.3	3.0	68.5
Sandwiches	....	44.9	10.9	9.0	33.3
Sardines (canned)	5.0	53.6	23.7	12.1	....
Salt mackerel	22.9	32.5	16.3	17.4	....

COMPOSITION OF SOME COMMON FOOD MATERIALS.—*Continued.*

Food-material.	Refuse.	Water.	Nitrogenous Substances.	Fat.	Carbohydrates.
	Per cent.	Per cent.	Per cent.	Per cent.	Per cent.
V. Fuel Value 500–1000 Calories per Pound.					
Beef (round)	8.5	62.5	19.2	9.2	....
Beef (sirloin steak)	12.8	54.0	16.5	16.1	....
Chicken (fowls)	18.0 to 42.7	38.3 to 53.7	11.5 to 16.0	6.9 to 21.5	....
Cream	....	74.0	2.5	18.5	4.5
Eggs	11.2	65.5	11.9	9.3	....
Herring (smoked)	44.4	19.2	20.5	8.8	....
Meats (lean)	0.5 to 11.3	59.9 to 69.2	18.1 to 21.4	7.8 to 14.2	....
Olives	19.0	52.4	1.4	21.0	3.5
Salmon (fresh)	23.8 to 35.[illegible]	45.0 to 51.2	12.6 to 15.0	6.6 to 9.5	....
Salmon (canned)	11.7 to 16.9	54.6 to 58.2	18.6 to 20.2	5.6 to 9.8	....
Tapioca pudding	....	52.0 to 71.6	2.8 to 4.2	2.3 to 4.8	21.9 to 38.1
Tongue (beef)	9.2 to 55.3	32.4 to 69.2	7.8 to 20.2	0.7 to 15.3	....
Turkey	17.1 to 32.4	41.1 to 44.7	15.8 to 16.8	5.9 to 25.5	....
Veal (breast)	15.7 to 25.4	48.5 to 55.7	14.2 to 16.9	9.4 to 12.8	....
VI. Fuel Value 400–500 Calories per Pound.					
Beans (canned red kidney)	....	72.7	7.0	0.2	18.5
Calf's-foot jelly	....	77.6	4.3	....	17.4
Salt cod (boneless)	1.6	54.8	27.7	0.3	....
Succotash (canned)	....	71.4 to 79.9	2.9 to 4.4	0.7 to 1.7	14.9 to 22.4
Sweet potatoes	20.0	55.2	1.4	0.6	21.9
VII. Fuel Value 300–400 Calories per Pound.					
Bananas	35.0	48.9	0.8	0.4	14.3
Butter beans	50.0	29.4	4.7	0.3	14.6
Fish (fresh)	25.2 to 46.0	46.1 to 49.1	11.9 to 12.0	1.8 to 5.9	....
Grapes	25.0	58.0	1.0	1.2	14.4
Hash	....	80.3	6.0	1.9	9.4
Milk	....	87.0	3.3	4.0	5.0
Potatoes	20.0	62.6	1.8	0.1	14.7
VIII. Fuel Value 200–300 Calories per Pound.					
Apples	25.0	63.3	0.3	0.3	10.8
Chicken (broilers)	31.4 to 55.1	44.6 to 52.4	9.0 to 15.7	1.1 to 1.8	....
Cranberries	....	87.6 to 89.5	0.4 to 0.5	0.4 to 0.9	9.3 to 10.9
Onions	10.0	78.9	1.4	0.3	8.9
Oysters (solid)	....	82.2 to 92.4	4.5 to 7.3	0.5 to 1.8	1.5 to 6.2
Parsnips	20.0	66.4	1.3	0.4	10.8
Pears	10.0	76.0	0.5	0.4	12.7
IX. Fuel Value 100–200 Calories per Pound.					
Beets	20.0	70.0	1.3	0.1	7.7
Cabbage	15.0	77.7	1.4	0.2	4.8
Carrots	20.0	70.6	0.9	0.2	7.4
Green corn	61.0	29.4	1.2	0.4	7.7
Lemons	30.0	62.5	0.7	0.5	5.9
Oranges	27.0	63.4	0.6	0.1	8.5
Soups (canned)	....	91.0 to 92.8	2.9 to 5.0	0.2 to 0.8	0.6 to 5.7
Spinach	....	91.6 to 92.8	1.8 to 2.4	0.2 to 0.5	3.1 to 3.4
Squash	50.0	44.2	0.7	0.2	4.5
Tomatoes (canned)	....	92.5 to 97.9	0.3 to 1.7	0.1 to 0.3	1.4 to 8.1
X. Fuel Value 10–100 Calories per Pound.					
Asparagus	....	94.0	1.8	0.2	3.3
Bouillon (canned)	....	96.5 to 96.7	1.7 to 2.6	0.0 to 0.2	0.1 to 0.3
Celery	20.0	75.6	0.9	0.1	2.6
Cucumbers	15.0	81.1	0.7	0.2	2.6
Watermelons	59.4	37.5	0.2	0.1	2.7

and of fatness or leanness in animals, of method of preparation or of combination in cooked foods.

Therefore examinations of materials are imperative if there is to be any basis of calculation. In an institution where, for instance, flour forms two-thirds of the daily ration, if it contains the lowest per cent. of nitrogen it may not furnish sufficient proteid for a well-balanced ration, or if the meat used is very lean there may not be fat enough for the best nutrition.

The great variation in the proportion of water leads to many surprises, and the amount of unedible material is to be considered. The uneducated provider buys oysters under the impression that he is furnishing food of high value, and does not distinguish between potatoes and rice.

In the present state of our knowledge, the best use to which we can put such tables and analyses is as a check against gross errors of diet, which are found with alarming frequency especially among children and students, those who can least afford to make them. References will be found in the Bibliography to works for further study along these lines.

Dietaries.—A dietary is simply a known amount of food of known composition per person per day, week, or month.

What is called a standard dietary is such a combination of food-materials as shall furnish the amounts held to be necessary. The following are examples of such standard dietaries:

Approximate Amounts required daily by	Nitrogenous, grams.	Fats, grams.	Carbohydrates. grams.	Calories.
Child of 6–9	62	45	200	1593
Child of 9–14	78	45	281	1890
Adult at rest	100	75	380	2665
Adult at moderate work	100	90	450	3092
Adult at hard work...	125	125	500	3725

(In feeding experiments from 10 to 20 per cent. more must be allowed for waste and indigestibility.)

From the table on p. 148 may be selected such food as will give the required quantities in variety enough to suit any taste. That which the table cannot give is the per cent. of each which, under any given condition, will be utilized by the person fed. The strength of the digestive juices, exercise, fresh air, the cooking, the mixing of the foods, the habits of mind as to food, the customs of the family, all influence this utilization, so that other means must be resorted to in order to gain an idea of what is practicable. This is done by taking account of the food of persons free to choose; of those in different countries, in different circumstances, and using a great variety of materials. Since Voit made his standard dietary in 1870, many hundreds, at least, have been so gathered in the United States alone—more than two hundred since 1886. All the information thus gained goes to confirm the theoretical standard, and also to show how much depends upon suitable preparation and combination. These last two things help each other.

As food is ordinarily prepared, about 10 per cent. must be deducted for indigestibility in a customary mixed diet, and about 10 per cent. more for the refuse or waste of food as purchased, so that of the total pounds of meat, vegetables, and groceries some 20 per cent. is of no final service in the body. It is immaterial whether this amount is subtracted from the final calculation or whether the higher figures be taken, that is, whether 125 grams of proteid as purchased or 100 grams final utility is used. There will be an unknown limit in either case. According to late experiments 100 grams of proteid is high. The waste of fats is less in proportion as the dietary is a restricted one.

Knowledge of Food Values Necessary.—The most serious aspect of the food question is that the taking of it is voluntary, not, like air, a necessity beyond control, and that the

most fantastic ideas are allowed to rule. The day-laborer is in little danger, since his food demand is made strong by out-of-door exercise; but the student who shuts himself up in hot, close rooms, and who does not look upon food as his capital, but only as a disagreeable task or an amusement, is in great danger, as is he who, having heard that one can live on a few cents a day, proceeds to try it without knowledge, and suffers a loss of efficiency for years or for all his life.

It is not nearly so difficult to acquire a working knowledge of food values as of whist or golf, so that on entering a restaurant a suitable menu may be made up within one's allowance. It is only necessary to correct prevailing impressions and reinforce one's experience.

Figs, dates, raisins, and prunes are apt to be regarded as luxuries instead of as rich food-substances of a most digestible kind when freed from skin and seed. Nuts are a much neglected form of wholesome food, admirably suited to a winter table from their richness in fat, and also furnishing muscular energy, as is seen in the agile squirrel, and is proved by many human examples. With nuts, however, must be taken fruits or other bulky foods, to balance the concentration. The somewhat compact and oily substance must be finely divided and freed from its astringent skin.

In distinction from these rich foodstuffs, we find oranges, apples, etc.; the usual garden vegetables, asparagus, lettuce, etc., which, while they fill an important place in the dietary, add little directly to the energy of the body and need not be considered except as, by their flavor or æsthetic stimulus, they add to the efficiency of the rest.

In looking over some housekeeping bills of a family not given to extravagance, but with a well-stocked market at hand and no especial check on the cook's orders, it was found that the ten staple articles cost 50 per cent. of the whole, the

really nutritious foods of higher price 20 per cent., and the mere accessories 30 per cent.

These accessories are truly cheaper than doctors' bills, and a high rate of efficiency in human mechanics is worth attaining even at a considerable expense. The chief difficulty lies in a subject outside the scope of these pages, namely, waste of the expensive or less nutritive material, or substitution of these for others more nutritive. For instance, a meal of lettuce dressed with oil, eaten with bread and cheese, fulfils all the requirements of nutrition, and may cost five cents. The same food value from sweetbreads, grape-fruit, etc., might cost a dollar.

CHAPTER IX.

THE PROBLEM OF SAFE FOOD. ADULTERATION AND SOPHISTICATION.

Where food-materials are abundant, of known value, and without foreign admixture, there the general welfare of the people is satisfactory, barring sanitary errors in other directions. Where opportunity is given for the unscrupulous dealer to increase his gains at the expense of the health and lives of the people, children especially, it is eagerly seized upon, and milk diluted with water, colored with coal-tar products, and preserved with borax or formaldehyde is furnished so long as the community is ignorant enough to permit it.

In frontier towns baking-powder containing alum is still sold, and in many places ginger containing 50 per cent. of turmeric, buckwheat, and redwood sawdust is on the market.

The average buyer is content to go by familiar appearance, and is quite satisfied if he sees a dead bee in his honey and the usual form and color in his coffee-bean. Scientific skepticism has not yet touched the purchaser of the essentials of life, and manufacturers are not slow to perceive and to take advantage of his credulity. It is not necessary to resort to poisonous material or to directly deleterious substances; it is only necessary to mix a cheaper but equally wholesome material with a favorite article, or to substitute it altogether. To meet the craving for variety it is only necessary to make

slight changes in the outward appearance of common substances and then to advertise widely the discovery of some new process by which the food value is increased tenfold. In order that the community may be supplied with safe food, as well as with safe water, the education of the individual is important, even essential, since food is even more completely under individual control than is water. It is true that State and municipal regulations exist and should be enforced as to palpably noxious substances and those that are notoriously fraudulent. The relation of the citizen to these is the same as to the purity of the water-supply; it is his duty to uphold the hands of the authorities in the necessary expense of inspection and prosecution.

Adulteration and Sophistication.—To adulterate is defined as to debase, "to make impure by an admixture of baser materials, as in the case of coin, liquors," etc.

As an explanation of sophistication, which is often used as synonymous with adulteration, this quotation is given: "These men have obscured and confounded the nature of things by their false principles and wretched sophistry." (South.)

The sophists were educated and intelligent men, and persuaded the people by specious reasoning. The modern "pure food" manufacturer is a sophist who, with great skill and by the aid of the well-paid expert, persuades the general public that he is their benefactor in that his chemists have penetrated nature's secrets, hidden from the ordinary man, and therefore that he is able to offer them long life and prosperity at so many cents the pound.

Although the words "adulteration" and "sophistication" are in a degree synonymous, yet there is a distinction which seems borne out in legal practice. To adulterate the coin of the realm or the liquor of the bar with a baser metal

or an imitation whisky is a heinous offence. So is the mixture of milk with the baser article, water, which thereby lowers its food value. But the "wretched sophistry" which obscures the nature of things on a package of prepared food misleads more persons and inflicts more injury upon the community than the other, yet goes unrebuked. The most barefaced assertions are printed in magazines, and "pure-food shows" only whet the appetite for something new.

Predigested Foods.—This craving for something new to stimulate a jaded appetite already spoiled by endless variety and bad combinations has led to the manufacture of a cereal preparation for nearly every day in the year. No better commentary on the laziness or wilful ignorance of American providers could be made than this. Little do the people know about wheat or cooking if they suppose that grain can be changed by manipulation in any kind of machine so as to give greater food value than was contained in the grain. While it is true that some of these preparations are far better than the half-cooked grains found on so many tables, the fact remains that it is the cook and not the substance which is poor. The false statements on food packages of all kinds are so absurd that they would defeat their own purpose were they viewed in the light of common sense. It is not always best to have food which is too easily digested.

"The excessive fear of indigestible food which prevails among the wealthier classes may lead to universal debility of the intestinal muscular walls." * This fear and the lack of exercise is working mischief especially among students. Colleges do not educate along the fundamental lines of health. To be sure, gymnasiums are becoming common, and sometimes exercise does correct bad habits of eating, but

* Bunge: "Physiological Chemistry" (trans.), 1890, 83.

a knowledge of food principles should go along with it in order that the greatest efficiency may be obtained.

A predigested food is quickly absorbed into the circulation, and hence a small quantity causes a sensation of fulness and satisfaction which, however, soon passes away and a faintness results. This is especially true of the sugars and dextrins. Frequent meals should go with these easily absorbed foods. This rapid digestion is the cause of much pernicious eating of sweets between meals, which satisfies the appetite for the time being and prevents substantial quantities of other foods being taken at the time they are offered.

A lack of responsibility for the energy which we owe to the world, an inconsiderateness for the suffering we bring upon others, leads us to walk upon the thin ice of mere whimsical eating.

Extent of Adulteration.—The proportion of food adulterated in the sense of harmful additions has always been comparatively small; probably in no community has it ever reached 10 per cent. of the food sold. In States which have legal penalties it is undoubtedly below 5 per cent. Such statements as that 90 per cent. of the food offered in any market is adulterated can only mean, if true at all, that 90 per cent. of all the *names* of materials sold in shops cover more or less fraudulent mixtures. For instance, flour is rarely adulterated; pepper, ginger, and mustard are nearly always heavily adulterated. For one pound of these substances sold, 1000 pounds, or more, of flour go out from the store. Looked at in this light the subject assumes quite another aspect. A canvass of the State of Massachusetts in 1879,* before the passage of the law of

* Ellen H. Richards: "The Adulterations of some Staple Groceries." Ann. Rep. Mass. State Bd. Health, 1879 (Supp.), 55.

1882 and subsequent restrictions, showed that the staple articles were very little adulterated; that then, as now, it was the condiments, of which only a small quantity is used at any one time, which showed the highest per cent.

The influence of a stringent law fairly well enforced is seen in the decrease of the adulteration of cream of tartar in samples examined, which fell from 42 per cent. in 1879 to 5 per cent. in 1898.

Of suspicious samples of foods, exclusive of milk, examined in the latter year by the State of Massachusetts, only 13.4 per cent. were adulterated. Since only suspected articles were taken by the inspectors, the actual per cent. must be far below this. Estimated on the total quantity sold, it is doubtful if more than one per cent. of food which can come under the law is adulterated in Massachusetts to-day. The records of localities without the legal protection of inspection is not quite so good as those of the five States which have stringent laws, and yet it is doubtful if harmful adulteration is very prevalent.

Trade Names.—Much of this so-called adulteration deceives only the ignorant buyer. "Strictly pure" is a well-understood trade term and means "with a certain per cent. of addition"; "pure" has a greater addition, as "pure" spices. Of patent and proprietary preparations, and those covered by a trade name, the sale is on the increase, so that the statement is justified that the frauds in foodstuffs are mainly commercial, and not harmful in a direct way. Among the most serious are those packages claiming to consist of gluten and to furnish a substitute for hearty food and those so largely used by students. "Gluten flour" is not what the uninstructed might think, that which is very rich in gluten, but is only a whole wheat, possibly a very little richer in nitrogen than ordinary flour. "What's in a name" is well

understood by sardine-canners, bread-makers, restaurant-keepers, and grocers. The dealer caters to the people and goes no farther than they readily follow him.

Special Cases.—The use of canned goods brings certain dangers in the dissolved metals from the cans or from the solder, also from a careless habit of allowing food to stand in the opened tins. The liking for bright green pickles and peas leads to coloration by copper salts. The demand for cheap jellies has developed a new industry. The parings and cores of apples prepared for drying are cooked, strained, colored, and flavored to make to the eye a fair imitation of raspberry, currant, and grape jelly, sold for 7 to 10 cents a tumbler.

Flavoring extracts offer a fertile field for chemical substitutes.

The excessive use of preservatives is caused by the craving for food out of season and out of place: for summer fruit in winter, for oysters a thousand miles inland, and by the urban demand for fresh milk, which must be brought at least one hundred miles and can be delivered but rarely under thirty-six hours from the farm. The difficulty even then of furnishing enough leads again to the dilution by water, either indirectly through the breed and feed of the cow or by direct addition. Again, the extensive demand for cream tends to encourage the topping of the milk.

With this increase in quantity and in time of keeping fresh food comes also the danger of transmission of disease, which constitutes one of the worst dangers in food. It happens with considerable frequency that thirty or forty cases of scarlet-fever are traced to a single farm; that typhoid-fever also is disseminated in the milk. Cream and butter are also subject to suspicion. During the years 1890 to 1899 nine

experts reported on 339 samples of butter and found tubercle bacilli in 21 per cent. of them.

The dangers in butter are largely increased by the practice of "doubling" the yield by a treatment of milk with rennet and salt, "black pepsin," or other nostrums, which works a large proportion of curd into the butter, but also renders the mass much more liable to decomposition. Since the food value of curd is only half that of fat, and since it also carries more water, the fraud is serious on both sides.

In many ways the bread-supply of a city needs looking after from a sanitary and economical point of view quite as much as the milk-supply. It is not at all improbable that, first and last, as much disease is caused by bread from unsanitary bakeries, by badly baked bread, and by unduly light bread which has not sufficient food value, as by any other cause.

Summary.—The chief dangers in food are from wrong proportions of proteid, fat, and carbohydrates, from fermentable and irritating decompositions, from bad methods of cooking and unsuitable combinations, from transmission of micro-organisms either by exposure to dust or by contact with filthy hands or vessels, to a favorable medium for the growth of pathogenic germs.

From this hasty survey it will be seen how little danger to health is incurred if only reasonable care is taken and if the always doubtful articles are avoided.

Take, for instance, that most commonly adulterated class, spices. Who will say that it may not be better to eat corn and buckwheat and ground peas than pure pepper? Rice is certainly a more wholesome food than ginger, and starch than soda. Glucose is even more easily absorbed than cane-sugar. These are cases of frauds on the pockets, but possible blessings in disguise for the stomachs. When any com-

munity is so ignorant as to permit of such glaring cases of adulteration as coal-tar dyes in food, and gypsum in cream of tartar, they deserve to suffer. It is knowledge on the part of each intelligent citizen which will mend matters, even if it is only that kind of empirical knowledge that one is forced to learn in relation to electricity and steam in order to live in a modern house.

The natural food-materials are so complex in composition that one may well be led astray by outward appearances, and substances of the same proximate composition present themselves under so many guises that when the markets of our cities offer the food of all the nations of the earth, how shall the buyer know what he is getting? To outward seeming, the potato and the banana have little in common, but their food value is almost identical, with the advantage on the side of the banana.

The general public is alarmed over newspaper reports not wholly disinterested, or is "instructed" by paid agents. People become accustomed to certain terms which are held up as scarecrows, and learn to look to the daily press rather than to the agricultural college for knowledge as to new or dangerous foods.

The remedy lies in their own hands. Every high-school laboratory should contain a case of samples and charts of values, and it should be considered just as important for good citizenship that the child should have the tools of health put in his hands as that he should learn about banking and interest. His bank account is his health. His interest is his daily efficiency.

So rapidly do new substances come upon the market that it is of little use to put into a general text-book definite statements of the quality of many foods. A baking-powder or a spice which is honestly made to-day may next week pass

into the hands of unscrupulous dealers who please the public and thereby salve their consciences.

To furnish what the people *think* they want has been the rule from the days of an earlier generation of grocers, who divided a barrel of cooking-soda in halves and set one-half on one side of the store for "saleratus" and the other on the opposite side for soda, so that there should be no suspicion in the mind of the customer that the packages came from the same barrel, and yet each might satisfy his individual preference.

We wish to dwell more strongly on the ethical and hygienic side of the question than on the financial. Evil-doers thrive only when reputable people countenance them. Adulterated food will be offered only so long as buyers eagerly take it. "Those that hide can find." If science is called upon to sophisticate food, science can find out how it is done. The chemist should be so grounded in morals as to refuse to sell his knowledge for a manufacture which is dangerous to health. We have tried to show that it is not very frequently the case that the manufactured article is of itself directly injurious, only in its misuse.

It may be a question which is the cheaper, to build a subway or to kill a few persons now and then by the surface cars. So in food, it is necessary either to put an elaborate machinery of inspectors and chemists and courts in motion, at great expense, or to educate the people at large so that each will be his own inspector. The latter is more in harmony with American practice, but the economic conditions in other directions are pressing the food-supply into the same channels as clothing, furniture, and transportation; that is, away from individual control as to *manufacture*. This necessitates individual knowledge in *purchasing* if satisfactory results are to follow.

This knowledge is now easily obtained through the city, State and government laboratories, and their publications are accessible to all who can read and write. There is, therefore, no excuse for general ignorance and credulity as to trade preparations of foods, any more than for the degrading habit of purchasing patent medicines to remedy the ills caused by the misuse of food. Both together form the saddest commentary on human weakness and lack of rational thought.

CHAPTER X.

ANALYTICAL METHODS.

In the discussion of the methods employed for the examination of food-materials, only a few typical substances have been considered, and the processes given are such as to bring into prominence the scientific aspect rather than the technical detail of the subject; at the same time it is hoped that a sufficient variety of methods is given to enable the student to gain considerable experience in the necessarily short time which can be allotted to the subject.

Both on account of its importance as a food-material and on account of its availability for the various tests, milk has been chosen as a type of animal food; moreover, it may be made to serve as an excellent example of the changes to which food-materials are liable through the growth of the micro-organisms. The analysis of milk includes determinations of specific gravity, water, or total solids, ash, fat, nitrogen, and sugar, together with the separation of casein and albumin, the determination of the products of putrefaction and fermentation, namely, ammonia and acidity, also the detection of preservatives and coloring matters.

Wheat is taken as a type of vegetable foods. The examination which may be made of this class includes the determination of moisture, ash, fat, nitrogen and proteids, starch, cellulose, and the products of peptonization and saccharification.

The nature and composition of the various fats and oils is briefly illustrated by the examination of butter and the determination of the principal constants of the butter-fat.

The results of fermentation are illustrated by the determination of alcohol in beer, wine, meat extracts, patent medicines and "temperance drinks," flavoring essences and the like. The determination of the acidity, of the "extract," and of nitrogen is also sometimes desirable.

Condiments, spices, tea, and coffee are generally examined by means of microscopic tests, but adulterations of these, as of most common groceries, affect the health less than the pocket. Text-books on food adulteration furnish sufficient information on these points. (See Bibliography, p. 250.)

MILK.

General Statements.—Milk is an emulsion of fat-globules with casein and other nitrogenous bodies, mineral salts (probably in combination), sugar and water. The average percentage composition of the more important varieties of milk, as found by recent observers, is summarized in the following table:

	Water.	Sugar.	Proteids.	Fat.	Ash.
Cow	86.90	4.80	3.60	4.00	0.70
Human	88.75	6.00	1.50	3.45	0.30
Goat	85.70	4.45	4.30	4.75	0.80
Ass	89.50	6.25	2.00	1.75	0.50
Mare	90.75	5.70	2.00	1.20	0.35
Sheep	80.80	4.90	6.55	6.85	0.90

In connection with this table should be noticed the high proportion of sugar and low proportion of casein and ash in human milk as compared with cow's milk. The former is not readily curdled, the casein never separating in a compact clot

which settles to the bottom, a difference which is attributed to the lower proportion of fat to casein.*

The average composition of 120,540 samples of cow's milk, extending over a period of eleven years, and the average composition of 14,135 samples of cow's milk for the year 1898, analyzed directly on arrival of the milk from the farm, is given by Vieth and Richmond † as follows:

	Average, 1898.	Average of eleven years.
Specific gravity	1.0320	
Total solids	12.73	12.90
Solids not fat	8.90	8.80
Fat	3.83	4.10

An examination of milk as regards its *healthfulness* usually consists in determining what changes, if any, have taken place in its constituents due to the growth of micro-organisms. Milk is a natural culture medium for the growth of micro-organisms and they increase in it with almost incredible rapidity. These changes which take place are called "fermentations." The two most common are the acid and the alkaline.

Acid Fermentation.—Milk-sugar is converted wholly or in part into lactic acid under the influence of a class of organisms of which *bacillus acidi lactici* is the best known and is generally regarded as predominating. The extent to which this change has taken place is shown by the test for acidity.

Alkaline Fermentation.—In the alkaline fermentation the albumin and casein are decomposed with the formation of ammonia and other intermediate nitrogenous products, some of them of a poisonous character, as is shown by the prevalence of cholera infantum when such decomposed milk is used,

* Lehmann and Hempel: *Arch. Physiol.*, **56** (*1894*), 558.

† *Analyst*, **17** (*1892*), 84; **24** (*1899*), 197.

and by cases of poisoning by ice-cream, etc. This fermentation generally occurs simultaneously with the acid fermentation, but at first is much less active; at a subsequent stage, however, the alkaline fermentation becomes more pronounced, and in certain cases may completely dominate the other fermentations.

Other Fermentations.—Butyric acid fermentation may be a result of the action of one or several groups of bacteria upon the glyceride of butyric acid. This action sets free the butyric acid in part and the fat becomes in time "rancid," but this change takes place, as a rule, more slowly and is not so common as the others.

The production of *koumiss* is an instance of an artificially incited change. Various other fermentations occasionally occur which cause a slimy appearance or a bitter taste. Various colors may be imparted to the milk by the presence of *chromogenic* or color-producing micro-organisms. The student is referred to the various journals and to text-books on dairy bacteriology for accounts of these less important changes.

Sampling.—In all manipulations with milk the importance of thorough and frequent *mixing, not shaking*, cannot be too strongly emphasized; this is best accomplished by pouring it from one vessel to another. This will be found necessary even when the milk has been standing for only a few minutes, on account of the rapid rise of the cream. The apparatus used to contain or to measure milk should be thoroughly washed out as soon as possible.

PHYSICAL TESTS.

Specific Gravity.—Take the specific gravity in the usual manner by means of a hydrometer or by the Westphal balance, at 15° C. If the temperature of the milk varies from

15°, the reading may be corrected by means of Table IX, Appendix A. Take a reading of the lactometer at the same time. In this instrument the minimum density for whole milk is fixed at 100, corresponding to a specific gravity of 1.029.

Notes.—The specific gravity of milk is, in the main, a function of two factors, namely, the percentage of solids not fat and of the fat. The former raises it; the latter lowers it. The determination of the specific gravity alone is not to be relied upon as an absolute index of the purity of the milk. The specific gravity varies in general from 1.029 to 1.034, and in most cases of normal and well-mixed milk from several cows the specific gravity will lie between 1.030 and 1.032.

Opacity. — The white color and opacity of milk are largely due to the presence of the suspended fat-globules and of the casein in colloidal form. The influence of the latter is shown by the fact that the color of milk is not greatly changed after it has passed through a centrifugal separator which removes practically all of the fat. The degree of opacity and the percentage of fat may be determined by means of Feser's lactoscope, the *modus operandi* of which is given with that instrument. Another instrument of like principle is Heeren's pioscope,* which consists of an ebonite disk with a raised rim; a drop or two of milk is placed upon it, the painted glass cover placed over it, and the color of the milk matched with one of those on the cover.

Cream. — Fill the creamometer, an elongated test-tube with graduations near the top, to the zero mark with the milk, add three drops of a solution of methyl violet, mix and put away in a cold place. After twenty-four hours read off the percentage of cream.

Notes.—The rapidity with which the cream rises indicates

---

* *Repit. f. Anal. Chem.*, 1881, 247.

whether sodium carbonate has been added, its action being to retard the rise of cream so that the milk is never blue. Should the cream separate very quickly and the milk be blue, the indication is that water has been added or that the milk is of poor quality. The method is only approximate and does not give the amount of fat. The methyl violet is added to render the reading sharper, as it does not dissolve appreciably in the cream. Cream contains most of the fat of milk with a small proportion of the other constituents. 1010 samples of cream gave an average of 48.3 per cent. fat.

CHEMICAL TESTS.

Reaction.— Normal milk gives the amphoteric reaction, that is, it turns delicate litmus both red and blue. This is due to the presence of neutral and acid phosphates of the alkalies. The reaction of the milk soon becomes acid, however.

Acidity. — Measure 5 c.c. of milk into a small beaker, dilute with 50 c.c. of water, and titrate the acid with $\frac{N}{10}$ sodium hydroxide, using phenolphthalein as an indicator. Express the acidity in degrees, considering each tenth of a cubic centimeter of sodium hydroxide one degree.

Notes.—The acidity of milk is due to the fermentation of milk-sugar and the production of lactic acid. Under favorable circumstances this change may take place with considerable rapidity. For example, six hours after milking the acidity may be fourteen to twenty-five degrees; forty-eight hours after milking it may reach one hundred degrees. When the acidity reaches twenty-three degrees milk coagulates on boiling.* An example of the rate of change is given in the following table: †

* Thorner: *Analyst*, **16** (*1891*), 200.

† "Thesis," Ethel B. Blackwell, M.I.T., 1891.

Day.	Acidity, c.c.	Sugar, Degrees of Rotation.
1	2.2	25.2
2	5.5	23.1
3	11.0	21.6
6	13.2	14.2
7	15.0	9.4
8	16.3	7.8
9	17.2	1.2

Alkalinity.—*Directions.*—Measure into a 750-c.c. round-bottomed flask 25 c.c. of the milk. Add 350 c.c. of ammonia-free water and 0.5 gram of sodium carbonate and distil over about 200 c.c. into a flask containing about 20 c.c. of dilute sulphuric acid (1:40). Neutralize the distillate with sodium carbonate and redistil it, receiving the distillate into 15 c.c. (measured) of $\frac{N}{10}$ hydrochloric acid. Titrate the excess of acid with $\frac{N}{10}$ sodium hydroxide, using methyl orange or cochineal as an indicator.

Notes.—In the alkaline fermentation the proteids of milk are decomposed through the growth of micro-organisms. Ammonia, or some substance which yields ammonia on distillation, is formed and tends to neutralize the lactic acid. On the other hand, abundant acid tends to check the growth of the alkaline ferments. It depends upon certain conditions of seeding and of temperature as to which gets the best start in the race. It is to the alkaline fermentation that most of the danger in using unsterilized milk is due.

The second distillation which is made is for the purpose of converting into ammonia any amines which may have been formed during the first distillation.

Total Solids.—The determination of total solids is best carried out in a platinum dish having a flat bottom about 2½ inches in diameter. Small dishes of aluminum or blacking-box covers answer very well, but of course cannot be ignited to obtain the ash.

Directions.—Weigh the platinum dish and add about 5.1

grams to the weights on the balance-pan. With the burette pipette deliver 5 c.c. of the well-mixed milk into the dish and weigh the whole as rapidly as possible to the nearest milligram. Evaporate the milk to dryness on the water-bath and then dry it in the oven at 100° to a constant weight. Some analysts recommend drying at 105° for three hours instead of to constant weight.

Notes.—It is important that the milk should be in the form of a thin layer, so that the evaporation of the water shall take place as quickly as possible. Under these conditions the residue obtained is nearly white; but if the process be prolonged, it may have a brownish color from the caramelization of the sugar.

Various analysts have proposed modifications of the procedure as described above, such as drying on sand or asbestos, coagulation of the milk by absolute alcohol before evaporation, and so forth, but simple evaporation in an open dish is generally regarded as the most advantageous.

Ash.— *Directions.*—Ignite the platinum dish containing the residue from the preceding determination at a low red heat until the ash is white or nearly so. In order to avoid too great a heat it is best to finish the ignition in a "radiator," as in the determination of the fixed residue in water-analysis, or the ignition may be carried out in a muffle if done with care. After weighing the ash, test it for carbonates by adding two drops of dilute hydrochloric acid. Effervescence in the ash is quite perceptible when carbonates are present in as small amount as 0.05 per cent. If desired, the hydrochloric acid solution of the ash can be used to test for boric acid as described on page 186.

Notes.—If the temperature is raised too much during ignition, the results will be low on account of the partial volatilization of the chlorides of the milk; hence the process should be carried out at as low a temperature as will admit of the oxidation of the carbonaceous matter.

The percentage composition of the ash of milk is given by Fleischmann and Schrodt * as follows:

		Per cent.
Potassium oxide,	K_2O	25.42
Sodium "	Na_2O	10.94
Calcium "	CaO	21.45
Magnesium "	MgO	2.54
Ferric "	Fe_2O_3	0.11
Sulphuric acid,	SO_3	4.11
Phosphoric "	P_2O_5	24.11
Chlorine,	Cl	14.60
		103.28
Less oxygen corresponding to chlorine †		3.28
		100.00

The ash of genuine cow's milk is free from carbonates and borates, and the ash soluble in water is about 30 per cent. of the total.

Fat.—Since the fat is so important a constituent of milk, an endless variety of methods and modifications for its determination have been devised. The processes which are in most general use may be divided into three classes:

1. Estimation of the fat by simple extraction of the milk, best dried on some absorbent material.

2. Volumetric estimation of the fat liberated by chemical treatment from the milk and collected by centrifugal force.

3. Estimation of the fat by extraction from the milk itself after solution of the casein by acid.

A typical method from each class will be described in detail.

(1) **Adams' Method.** — *Directions.*—Roll a strip of fat-free blotting-paper, 22 inches long and 2½ inches wide, into

* Baumeister: "Milch und Molkerei-Producte," S. 16.

† This correction is necessary because the metals are all calculated as oxides, when, as a matter of fact, a certain proportion are present as chlorides.

a rather loose coil and fasten it by a bit of copper wire. Hold the coil in one hand and carefully run on to the upper end of it 5 c.c. of milk from a burette pipette. Place the coil, dry end downward, in the water-oven and dry it for an hour. When dry remove the wire and place the coil in the Soxhlet extractor. If preferred, the strip of paper may be held horizontally in a frame and the milk run on to it. When dry the paper is rolled into a coil and extracted. Weigh the extraction-flask, place in it 75 to 100 c.c. of 86° gasolene (petroleum ether) and connect the extractor with the condenser. After the coil has been extracted for about two hours remove the extractor, connect the flask with the suction if it is at hand, and distil off the gasolene under reduced pressure. The increase in weight of the flask gives the fat. Oxidation of the fat by too long heating should be avoided.

Notes.—Absorbent paper exercises a selective action on the constituents of milk so that the fat is left on the surface of the paper, mixed with only about one-third of the non-fatty solids, and hence it is more easily extracted; further, owing to the greatly increased surface exposed, the extraction of the fat is practically complete.

Ether may be used instead of gasolene, but care should be taken that the ether is perfectly dry, otherwise other substances than fat, principally milk-sugar, will be extracted. On the other hand, substituted glycerides may not be dissolved out by ether. For these reasons the gasolene is to be preferred as a solvent, although its action is considerably slower than that of the ether.

Owing to the inflammable nature of the solvents employed, it is best not to use a flame as the source of heat, but to heat the flask by means of a steam- or water-bath. In this laboratory small electric heaters about 4 inches in diameter are used and have been found safe and convenient. The complete apparatus is shown in Fig. 10.

Another form of apparatus, devised by W. R. Whitney, which has been used with satisfactory results is shown in

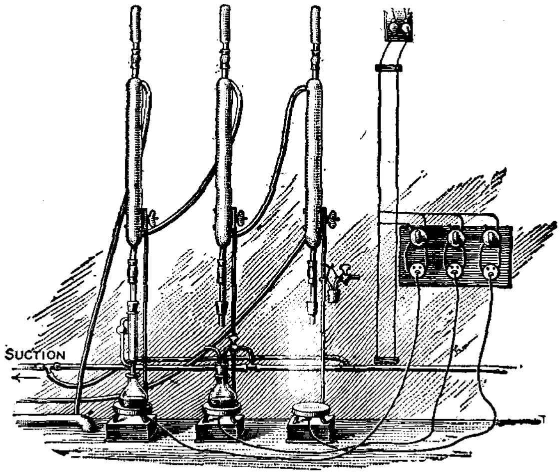

FIG. 10.—Apparatus for Fat Extraction.

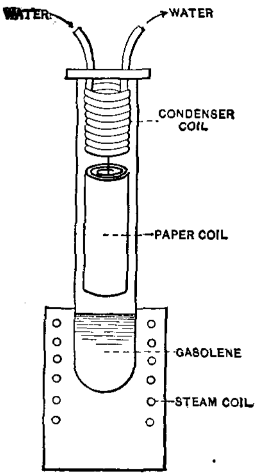

FIG. 11.

Fig. 11. It consists of an ordinary test tube, the lower part of which is heated by a steam coil. A coil of small brass tubing, carrying a stream of cold water, hangs in the mouth of the test tube and serves as a condenser. The paper coil hanging from the condenser is extracted by the use of about 10 c.c. of gasolene or ether.

(2) **Babcock Method.**—*Directions.*—Measure 17.6 c.c. of the milk from a pipette into the long-necked, graduated whirling-bottle. Measure out 17.5 c.c. of sulphuric acid (sp. gr. 1.83), and add it gradually to the milk, mixing the two thoroughly after each addition. Take care that none of the liquid spurts into the neck

of the bottle. After mixing the milk and acid, and while the bottles are still hot, place them in opposite pockets in the centrifugal machine, in even numbers, and whirl them for six minutes, at full speed. Then remove the bottles and add hot water until the fat rises to the 8 mark on the stem. Again place the bottles in the machine and whirl them at the same rate as before for one minute. Then measure the length of the column of fat by a pair of dividers, the points being placed at the extreme limits of the column, the fat being kept warm, if necessary, by standing the bottle in hot water. If now one point of the dividers is placed at the zero mark of the scale on the bottle used, the other will indicate the per cent. of fat in the milk.

Notes.—When the acid and milk are mixed the mixture becomes hot from the action of the acid on the water in the milk and turns dark-colored on account of the charring of the milk-sugar. The casein is first precipitated and then dissolved. The fat is thus separated in a pure state from the other constituents of the milk.

The fat obtained should be of a clear, golden-yellow color, and distinctly separated from the acid solution beneath it. If the fat is light-colored or whitish, it generally indicates that the acid is too weak, and a dark-colored fat with a stratum of black particles below it indicates that the acid is too strong. The best results will be obtained by the use of acid of the strength noted above.

A violet color is sometimes produced when the first portions of the acid and milk are mixed. This frequently indicates the presence of formaldehyde. (See p. 186.)

(3) **Werner-Schmid Method.**—*Directions.*—Measure 10 c.c. of milk into a long test-tube of 50 c.c. to 60 c.c. capacity and add 10 c.c. of hydrochloric acid (sp. gr. 1.20). Place

the tube in boiling water and heat, with frequent shaking, until the liquid turns dark brown, which generally requires about ten minutes. Do not heat it so long that the liquid turns black. Cool the tube thoroughly under the tap, add 30 c.c. of washed ether or of a mixture of equal parts ether and petroleum ether, cork tightly and mix well by inverting the tube. Allow the tube to stand for a few minutes for the complete separation of the ethereal layer, then remove the cork and transfer the ether to a tared flask by means of the apparatus shown in Fig. 12. This consists of a cork carrying an ordinary glass T tube. Through the straight limb of the T tube slides a bent glass tube, which is turned up at the lower end. The tube is adjusted by sliding it through the rubber collar (*C*) so that the lower end rests just above the junction of the two layers. On then blowing gently in the side arm (*S*), the upper layer is forced out into the flask. Repeat the extraction three times after the first, using 10 c.c. of ether each time and blowing it off into the flask. Distil off the ether, dry the residual fat and weigh.

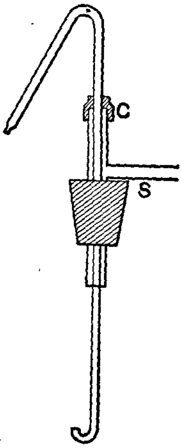

FIG. 12.

Notes.—It is almost useless to try to extract the fat from milk by shaking it directly with a solvent. An emulsion is formed with the other constituents of the milk, and it is impossible to get a good separation of the solvent even with the centrifugal machine. This is probably due to the action of the colloidal casein, because it is found that when a complete or partial solution of the casein is effected it is comparatively easy to extract and separate the fat by a solvent immiscible with water.

The ether which is employed should be well washed to

remove alcohol, and the heating with hydrochloric acid should not be continued too long on account of the liability of forming caramel products which dissolve in the ether. For that reason the process is not so well suited for use with condensed or highly sugared milks. Since lactic acid is slightly soluble in ether, it is better when working with sour milk to make the extraction with petroleum ether or a mixture of petroleum ether and ordinary ether.

Relation between Specific Gravity, Fat, and Solids in Milk.—As has been stated already, the specific gravity of milk is, in the main, a function of two factors, namely, the percentage of solids not fat and that of the fat. The former raises it, the latter lowers it. Taken by itself it affords very little indication of the composition, but if any other item be known, it should be possible to find, by calculation, the other quantities, provided the assumption is true. The solids not fat are made up of several fluctuating constituents, but "normal milk" seems to contain them in such a constant ratio that a calculation serves at least to detect an abnormal sample. For example, given the specific gravity and solids to calculate the fat:

Specific gravity $= Gr$. The amount which each per cent. of solids not fat raises the specific gravity $= s$. The amount which each per cent. of fat lowers the specific gravity $= f$. Total solids $= T$. Solids not fat $= S$. Fat $= F$. $Gr = Ss - Ff$; or, substituting for S its value $T - F$; $Gr = (T - F)s - Ff$. The uncertainty of the calculation lies in the values of s and f, which have not been quite satisfactorily determined.

At different times various formulæ have been proposed for this calculation, varying, as a matter of course, with the method of fat extraction employed. The one most exten-

sively used is that of Hehner and Richmond,* which is based on extensive observation and perfected processes of fat extraction. This formula is generally stated as follows:

$$F = 0.859T - 0.2186G,$$

where F represents the fat, T the total solids, and G 1000 × (specific gravity — 1.000).

The simple formula $\frac{6}{5}F = T - \frac{G}{4}$ answers within the limits of experimental error for normal milk, but not for skimmed or watered milk.

Example.—Data: $Gr = 1.0323$; $G = (Gr - 1) \times 1000 = 32.3$; $T = 12.90$.

$$\frac{6}{5}F = 12.90 - \frac{32.3}{4}. \quad F = 4.02 \text{ calculated}, \quad 3.99 \text{ found}.$$

A similar relation has been worked out for the proteids and sugar, so that from three determinations the whole composition may be calculated. Example as above:

Ash $= .70 = A$.

Formula: $P = 2.8T + 2.5A - 3.33F - .68\frac{G}{Gr.}$,

or $P = 36.12 + 1.75 - 13.32 - 21.28 = 3.27$.

Sugar $= T - (A + P + F)$

$= 12.90 - (.70 + 3.27 + 4.02) = 4.91$.

Where a number of calculations are to be made, Richmond's milk-scale will be found convenient. This is an instrument based on the principle of the slide-rule, having three scales, two of which, for the fat and the total solids, are marked on the body of the rule, while that for the specific gravity is marked on the sliding part. Extended tables are also used for the same purpose.

---

* *Analyst*, **13** (*1888*), 26; **17** (*1892*), 170.

Milk-sugar.—The methods for the determination of the sugar in milk may be divided into two general classes: (1) those depending on the reducing power of the sugar upon an alkaline copper solution; (2) those which are based upon observations of the degree of rotation of the plane of polarized light.

(1) Determination by Fehling's Solution.

(a) *Volumetrically.*

Directions.—The milk must first be clarified to remove substances other than sugar which would exert a reducing action on the Fehling's solution. To do this, measure 25 c.c. of milk from a pipette into a 250-c.c. bottle. Add 0.5 c.c. (measured) of 25 per cent. acetic acid, shake vigorously, and allow it to stand for five minutes. Add 75 c.c. boiling distilled water, shake, and let it stand two or three minutes. Add 15 c.c. of milk of alumina (see determination of chlorine in water), shake, and allow the bottle to remain on its side for ten minutes. Decant carefully into a medium-sized beaker, and add hot water again to the residue in the bottle. Decant the liquid from the beaker on to a ribbed Swedish filter. Wash thus by successive decantations from the bottle to the beaker, and thence to the filter several times before bringing the precipitate on the filter. Make the filtrate up to 500 c.c. and mix thoroughly. The solution should be perfectly clear and almost without color.

Titration.—Measure 5 c.c. of the copper solution from a burette into a 150-c.c. Erlenmeyer flask, add 5 c.c. of the alkaline tartrate solution and 40 c.c. of water. Heat to boiling and from a burette run in the sugar solution, as prepared above, as long as a blue color is seen in the liquid, which must be kept constantly boiling. When the end-point is apparently reached, test the solution for copper by filtering a

few drops through a very small filter on to a porcelain plate containing a dilute solution of potassium ferrocyanide strongly acidulated with acetic acid, when, if copper be present, the characteristic rose coloration will appear. This will give approximately the number of cubic centimeters required to decolorize the copper solution.

To find the exact number, add the quantity of sugar solution used above to a fresh portion of 5 c.c. of each solution and 40 c.c. of water, boil exactly two minutes, and test the solution for copper as before. If copper be still present, repeat the operation, using 0.2 c.c., more or less, of the sugar solution each time until the end-point is reached. If 10 c.c. of Fehling's solution of the strength given are reduced by 0.067 gram of milk-sugar, then $\frac{500 \times .067}{\text{c.c. solution used}}$ = grams of milk-sugar in 25 c.c. of the milk. The results are reported in per cent. From 27 to 34 c.c. of the milk-sugar solution are usually required to reduce 10 c.c. of Fehling's solution.

Notes.—The general principle upon which all these methods depend is based on the fact that certain sugars, among which is lactose, have the power of reducing an alkaline solution of copper to a lower state of oxidation in which copper is separated as cuprous oxide. The copper salt which is found to give the most delicate and reliable reaction is the tartrate. The two solutions which make up the Fehling's solution are best preserved separately, and mixed only when wanted for use, as otherwise the reducing power of the solution is liable to change.

The amount of reduction of the copper salt to the cuprous oxide is affected by the rate at which the sugar solution is added, the time and degree of heating, and the strength of the sugar solution; hence the necessity for adopting a definite procedure.

(*b*) *Gravimetrically by weighing as Cupric Oxide.**

Directions.—To 15 c.c. of the copper sulphate solution add 15 c.c. of the alkaline tartrate solution in a 150-c.c. Erlenmeyer flask. Add 50 c.c. of freshly boiled distilled water and place the flask in a boiling-water bath for five minutes. Then from a calibrated flask quickly add 25 c.c. of the sugar solution to the hot Fehling liquor, leave the 25-c.c. flask inverted in the mouth of the larger one, and keep the whole in the boiling-water bath for fifteen minutes. At the end of this time remove the flask and filter off the cuprous oxide as rapidly as possible through a thick layer of asbestos in a weighed porcelain Gooch crucible. Wash with boiling distilled water until the wash-water no longer reacts alkaline. Place the crucible in a platinum or nickel crucible and heat it, gently at first, then to a red heat for about fifteen minutes. Cool and weigh quickly, as the cupric oxide is somewhat hygroscopic. Convert the weight of cupric oxide into lactose by multiplying by the factor 0.6254, which will be sufficiently close for all ordinary work. If more accurate results are desired, consult Defren's table in the article previously mentioned.

Notes.—The asbestos which is used should be previously boiled in nitric acid and then in dilute sodium hydroxide and thoroughly washed.

The amount of cuprous oxide produced by the action of one gram of reducing carbohydrate on Fehling's solution, in the manner described, is not a constant for all dilutions. For this reason the amount of lactose cannot be calculated exactly from the weight of cupric oxide, but reference must be made to the specially constructed table. Moreover, each table, whether Allihn's, Wein's, or Defren's, can be used only

* Defren: *Tech. Quart.*, 10 (*1897*), 167.

when the reduction is carried out under conditions similar to those employed in the determinations on which the table was based.

(2) **Determination by the Saccharimeter.** — For the optical determination of milk-sugar the method of double dilution, as described by Wiley and Ewell,* will be found satisfactory.

Directions.—Into each of two flasks, marked at 100 and 200 c.c., respectively, put 65.52 grams of milk, add 10 c.c. of acid mercuric nitrate, fill to the mark, and mix by shaking. Filter through dry filters and polarize in a 400-millimeter tube, using the Schmidt and Haensch saccharimeter. Calculate the results as in the following example:

Weight of milk used		= 65.52 grams;
Reading from	100-c.c. flask	= 20°.84;
" "	200-c.c. flask	= 10°.15.
Then	10.15 × 2	= 20.30;
	20.84 — 20.30	= 0.54;
	0.54 × 2	= 1.08;
	20.84 — 1.08	= 19.76;
	19.76 ÷ 4	= 4.94, which is the **per cent.** of milk-sugar.

Notes.—The object in using the method of double dilution is to avoid the necessity of making corrections for the volume of the precipitate of casein and fat. The method is based on the fact that, within certain limits, the polarizations of two solutions of the same substance are inversely proportional to their volumes.

The flasks should be filled at nearly the same temperature as that at which the polarizations are made, and the tem-

---

* *Analyst*, **21** (*1896*), 182.

perature of the room should be kept as nearly as possible at 20° to avoid errors arising from marked changes in temperature.

PROTEIDS OF MILK.

Determination of Total Proteids.—Weigh 5 grams of milk into a 750-c.c. round-bottomed flask and determine the nitrogen by the Kjeldahl process as directed on page 203. Multiply the per cent. of nitrogen by the factor 6.25 to obtain the per cent. of proteids.

Determination of Casein and Albumin.*—*Directions.*—To 10 grams of milk add 90 c.c. of water at 40–42° C. and then 1.5 c.c. of 10 per cent. acetic acid. Agitate and warm at the above temperature until a flocculent precipitate separates, leaving a clear supernatant liquid. Filter, wash, and determine the nitrogen by the Kjeldahl process. Multiply by 6.38 for the casein.

To determine the albumin neutralize the filtrate with caustic alkali and phenolphthalein and heat it at 100° C. until the precipitate settles clear. Filter, wash, and determine the nitrogen as before.

Notes.—The principal proteid bodies present in milk are casein and albumin. Others are present in much smaller quantity, such as fibrin or globulin.

Different observers at various times have claimed the presence of other nitrogenous bodies, but these have not been entirely substantiated.

It is now generally held that the colloidal state in which the casein is held in milk is due to the combination with it of certain mineral compounds, chiefly those of calcium. The action of precipitants is on these mineral matters, breaking up the combination and releasing the insoluble casein.

---

* Van Slyke and Hart: *Am. Chem. J.*, 29 (*1903*), 170.

Most authorities at present favor the factor 6.38 for calculating the casein, although the old factor 6.25 is still largely used.

Adulterants.—The most common forms of adulteration of milk are the addition of water and the removal of cream. The former is detected by the decrease in the specific gravity, total solids, and ash, and the latter by the increased specific gravity and greatly decreased amount of fat. Various substances may also be added, such as cane-sugar or starch.

Direct Determination of Added Water.—This is best done by determining the specific gravity of the milk-serum after coagulation and removal of the casein.* The casein is coagulated by dilute acetic acid, filtered off on a dry filter, and the specific gravity of the filtrate taken at 15° C. by the Westphal balance. The specific gravity of the serum from normal milk is never below 1.027, and only rarely below 1.029. The addition of each ten per cent. of water lowers the specific gravity by 0.0010 to 0.0035.

Cane-sugar.—To detect the presence of cane-sugar boil about 10 c.c. of the milk with 0.1 gram of resorcin and 1 c.c. of hydrochloric acid for five minutes. The liquid will be colored rose-red if cane-sugar be present. The quantitative determination may be made by means of the polariscope.

Starch.—Heat 10 c.c. of the milk to boiling in a test-tube, and when cold add a few drops of a solution of iodine in potassium iodide. The presence of even 0.2 per cent. of starch will be shown by the characteristic blue coloration.

Coloring-matters. †— The principal coloring-matters added to milk are annatto, caramel, and aniline dyes. In

---

* Woodman: *J. Am. Chem. Soc.*, 21 (*1899*), 503.

† Ann. Rep. State Bd. Health, Mass., 1898, 697.

general, coloring-matters are added only to watered milk, but occasionally samples which were of standard quality have been found to be colored.

Directions.—Put about 100 c.c. of the milk into a small beaker, add 2 c.c. of 25 per cent. acetic acid and allow the beaker to stand quietly for about ten or fifteen minutes in a water-bath kept at 70° C., the casein being thus separated as a compact cake. Decant off the whey, squeezing the curd as free from it as possible by means of a spatula. Transfer the curd to a flask and let it remain covered with ether for an hour or more.

Evaporate the ether extract, which contains the annatto if present, add 5 c.c. of water, and dilute sodium hydroxide until the mixture, after thorough beating and stirring with a glass rod is faintly alkaline to litmus paper, and filter through a wet filter. If annatto is present, it will permeate the filter and give it an orange color when the fat is washed off under the tap. Treat the filter with stannous chloride. If annatto is present, a pink color will be produced.

After pouring off the ether examine the milk-curd for caramel or aniline orange. If the curd is left white, neither of these colors is present. If caramel has been used, the curd will be of a pinkish-brown color; if the color is due to the aniline dye, the curd will have a yellow or orange tint. To distinguish between the two colors shake a small portion of the curd in a test-tube with strong hydrochloric acid. The caramel-colored curd will act similarly to an uncolored curd, that is, it will *gradually* produce a deep blue color in the solution. On the other hand, the aniline color will *immediately* produce with the hydrochloric acid a pink color.

Note.—It is to be regretted that there is no positive test for caramel sufficiently delicate to serve here. The test as

described is a negative one, the only indication of caramel being the occurrence of a colored curd in which the color is not given by the aniline dye.

Preservatives.—The preservatives usually added to milk are salicylic acid, borax or boric acid, formaldehyde, and occasionally benzoic acid and potassium chromate. Carbonate of soda is also added in some cases to disguise the acidity of sour milk.

Salicylic Acid.—To 50 c.c. of the milk add 10 c.c. of the acid mercuric nitrate used in the optical determination of milk-sugar, shake and filter. Shake the filtrate violently in a separatory funnel with 30 c.c. of a mixture of equal parts of ether and petroleum ether. Evaporate the ethereal solution to dryness and add a drop of neutral ferric chloride solution to the residue. If salicylic acid is present, the characteristic violet color will be produced.

Boric Acid.—To 10 c.c. of milk in a small porcelain dish add 1 c.c. of hydrochloric acid (sp. gr. 1.12) and a strip of turmeric paper. Heat the dish for two or three minutes on the water-bath, remove the turmeric paper, wash and dry. In the presence of boric acid or borates the paper acquires a peculiar red color. This is changed by ammonia to a dark blue-green, but is restored by acid. The test for boric acid can also be applied to the hydrochloric acid solution of the ash.

Formaldehyde.—This is generally used as a 40 per cent. aqueous solution, sold under the name of *formalin.* Several simple tests commonly used for the detection of formaldehyde will be described.

(1) When the sulphuric acid is added to the milk in making the Babcock test for fat, a bluish-violet ring will be noticed at the junction of the two liquids when formaldehyde is present. One part of formaldehyde in 200,000

parts of milk can be detected by this test, but it fails when the formaldehyde amounts to 0.5 per cent. The test is more delicate if the sulphuric acid contains a trace of ferric chloride.

(2) To 10 c.c of milk in a small porcelain dish add an equal volume of hydrochloric acid (1.12 sp. gr.). Add one drop of ferric chloride solution and heat the dish with a small flame, stirring vigorously, until the contents are nearly boiling. Remove the flame and continue the stirring for two or three minutes. The presence of formaldehyde will be shown by a violet color which appears in the particles of the precipitated casein, the depth of color depending on the amount of formaldehyde present. This test readily shows the presence of one part of formaldehyde in 500,000 parts of milk.

*Benzoic Acid.**—Clarify and extract 50 c.c. of milk as described under salicylic acid. Evaporate the extract to dryness and treat the residue with 2 or 3 c.c. of strong sulphuric acid. Heat till white fumes appear; organic matter is charred and benzoic acid is converted into sulpho-benzoic acid. A few crystals of potassium nitrate are then added. This causes the formation of metadinitrobenzoic acid. When cool the acid is diluted with water and ammonia added in excess, followed by a drop or two of ammonium sulphide. The nitro compound becomes converted into ammonium metadiaredobenzoic acid, which possesses a peculiar reddish-brown color. This reaction takes place immediately, and is seen at the surface of the liquid without stirring.

Sodium Carbonate.—Detected in the milk-ash, as on page 171. If effervescence occurs, test the original milk with rosolic acid as follows: Mix 10 c.c. of milk with an

* Mohler: *Bull. Soc. Chim.* [3], 3 (*1890*), 414.

equal volume of alcohol, and add a few drops of a one per cent. solution of rosolic acid. The presence of sodium carbonate is indicated by a more or less distinct pink coloration. A comparative test should be made at the same time with milk known to be pure.

CREAM.

The increasing use of cream, purchased as such, for children and invalids as well as for the family table, necessitates careful inspection of its sources and quality.

The addition of preservatives is not uncommon. They may in general be detected according to the directions given under Milk.

A serious diminution in food value occurs when gelatine is added to give an appearance of "body" to a product lower in fat than standard cream. There is also greater danger of toxic fermentations.

Gelatine in Cream.*—Take 50 c.c. dilute sulphuric acid, containing 5 per cent. by volume strong acid. and warm to 70° C. Slowly add, with stirring, 50 c.c. of the cream. Warm until temperature is back to 70° again. Filter through a double filter. Catch 25-30 c.c. of the filtrate and supersaturate, cold, with magnesium sulphate, in fine crystals or powder. Filter through a dry filter. Take 5 c.c. of the filtrate and add 1 c.c. of a solution containing 5 per cent. tannic acid in 10 per cent. alcohol.† This will always give a precipitate. Now dilute with 10 c.c. of water. If the cream was free from gelatine, the precipitate will almost entirely dissolve, leaving the solution only very

* Private communication. A. H. Low.

† It is sufficient to mix 11 c.c. of ordinary 95% alcohol with 89 c.c. water.

slightly cloudy. A marked turbidity or precipitate remaining undissolved indicates gelatine. It is always best to run a blank on pure cream for comparison if the case proves doubtful.

BUTTER.

General Statements.—Butter consists of the fat of milk, together with a small percentage of water, salt, and curd. The curd is made up principally of the casein of the milk. These various ingredients are present in about the following proportions:

Fat	78.00–90.0	per cent.;	average,	82	per cent.
Water	5.00–20.0	" "	"	12	" "
Salt	0.40–15.0	" "	"	5	" "
Curd	0.11– 5.3	" "	"	1	" "

The fat consists of a mixture of the glycerides of the fatty acids. The characteristic feature of butter-fat is the extraordinarily high proportion of the glycerides of the soluble and volatile fatty acids when contrasted with other fats.

Recent investigations * show the following to be the probable composition of normal butter-fat:

Acid.	Per cent. Acid.	Per cent. Triglycerides.
Dioxystearic	1.00	1.04
Oleic	32.50	33.95
Stearic	1.83	1.91
Palmitic	38.61	40.51
Myristic	9.89	10.44
Lauric	2.57	2.73
Capric	0.32	0.34
Caprylic	0.49	0.53
Caproic	2.09	2.32
Butyric	5.45	6.23
Total	94.75	100.00

* Browne: *J. Am. Chem. Soc.*, 21 (*1899*), 807.

According to this, the proportion of volatile acids in butter (butyric, caproic, caprylic, and capric acids) amounts to 8.35 per cent. The amount of volatile acid in lard, for example, is about 0.1 per cent.

The usual examination of butter consists in the examination of the butter-fat, in order to detect the presence of foreign fats. The determination of the amount of curd may be of value also in some cases, more especially from a sanitary standpoint. The chief danger to health probably lies in the possible decomposition of the nitrogenous portion, for it is quite generally recognized that the substitution of oleomargarine is not injurious to health. It is a not infrequent practice, however, as remarked in the previous chapter, to incorporate a large amount (sometimes as high as 33 per cent.) of curd and other nitrogenous matters in fresh butter. If this is kept for any length of time, a decomposition is liable to occur which may have serious effects. Other determinations that are usually made are the water and salt.

A comparatively recent form of butter substitute which finds extensive use in some sections of the country is "process," or "renovated," butter. The raw material, or "stock," used for the manufacture of this consists of butter which cannot be sold as butter either because of deterioration through rancidity or moulding or because, through carelessness on the part of the makers, it possesses an unattractive appearance or flavor. The chief recruiting-ground for this material is the country grocery store. The fat, separated from the curd by melting and settling, is aerated to remove disagreeable odors and leave it nearly neutral. This is then emulsified with fresh milk which has been inoculated with a bacterial culture, and the whole is chilled, granulated, and churned. The butter is then worked and packed for market in the usual manner. The character of the prod-

uct has much improved since the early days of the industry, the best grades now approximating the lower grades of creamery butter.

The "aroma" of butter seems to be connected with the decomposition produced by the action of bacteria on the casein and the small amount of milk-sugar that is present, and not with any change in the fats; there is no evidence, however, that any unwholesome effect is produced by the aroma-giving organisms.

The rancidity of butter-fat is generally considered to be due to decomposition and oxidation of the fatty acids, especially the unsaturated ones, the amount of change depending on conditions of light, heat, and exposure to air.

Examination of the Fat. — The fat is first separated from the other constituents of the butter so that it may be weighed out for the various tests.

Directions.—Melt a piece of butter, about two cubic inches, in a small beaker placed on top of the water-bath so that the temperature shall not rise above 50°–60°. After about fifteen minutes the water, salt, and curd will have settled to the bottom. (A better separation may be secured by pouring the melted butter into a test-tube and whirling it for 3–4 minutes in a centrifugal machine.) Place a bit of absorbent cotton in a funnel, previously warmed, and decant off the clear fat through the cotton into a second beaker, taking care that none of the water or curd is brought upon the filter. When the filtered fat has cooled to about 40° place a small pipette in the beaker and weigh the whole.

By means of the pipette the desired amount of fat is taken out, the pipette replaced in the beaker, and the whole again weighed. The difference in weight gives the exact amount of fat taken. It is a saving of time, however, if several portions are to be weighed out, to make the weights one after

another, so that one weight will suffice for a determination. Weigh out thus: Two portions of 5 grams each into 250-c.c. round-bottomed flasks for the Reichert-Meissl method, one portion of 2.5 to 3 grams into a 500-c.c. beaker for Hehner's process, two portions of about .35 to .5 gram each into 300-c.c. glass-stoppered bottles for determination of the iodine value.

(1) **Reichert-Meissl Number for Volatile Fatty Acids.** —*Directions.*—To the fat in the 250-c.c. flasks add 2 c.c. of strong caustic potash (1:1) and 10 c.c. of 95 per cent. alcohol. Connect the flask with a return-flow condenser and heat on a water-bath so that the alcohol boils vigorously for 25 minutes. At the end of this time disconnect the flask and evaporate off the alcohol on a boiling-water bath. After the complete removal of the alcohol add 140 c.c. of recently boiled distilled water which has been cooled to about 50°. The water should be added *slowly*, a few cubic centimeters at a time. Warm the flask on the water-bath until a clear solution of the soap is obtained. Cool the solution to about 60° and add 8 c.c. of sulphuric acid (1:4) to set free the fatty acids. Drop two bits of pumice, about the size of a pea, into the flask, close it by a well-fitting cork, which is tied in with twine, and immerse it in boiling water until the fatty acids have melted to an oily layer floating on the top of the liquid. Cool the flask to about 60°, remove the cork, and immediately attach the flask to the condenser.

Distil 110 c.c. into a graduated flask in as nearly thirty minutes as possible. Thoroughly mix the distillate, pour the whole of it through a dry filter, and titrate 100 c.c. of the mixed filtrate with $\frac{N}{10}$ sodium hydroxide, using phenolphthalein as an indicator. Increase the number of cubic centi-

meters of alkali used by one-tenth, and correct the reading also for any weight of fat greater or less than 5 grams.

For example, if 5.3 grams of butter-fat are used, and 100 c.c. of the distillate require 27.4 c.c. of $\frac{N}{10}$ NaOH, 110 c.c. would require $27.4 + 2.74 = 30.14$ c.c. Then $5.3 : 30.14 = 5 : x$. $x = 28.4$. x is the Reichert-Meissl number.

Notes.—The Reichert-Meissl number for genuine butter varies from 24 to 34; the average usually taken is 28.8. Oleomargarine gives a number of about 1.5 to 2.

When the fat is treated with potash it is decomposed, the glycerine being set free, and the potassium salts of the fatty acids, that is to say, the potassium soaps are formed. Hence the process is called *saponification.* For butyric acid the reaction is

$$C_3H_5(C_3H_7COO)_3 + 3KOH = 3C_3H_7COOK + C_3H_5(OH)_3.$$

The alcohol is used to dissolve the fat. But at the moment the butyric acid is set free it tends to combine with the alcohol to form a volatile ether:

$$C_3H_7COOH + C_2H_5OH = C_3H_7COOC_2H_5 + H_2O.$$

The object of the return-flow condenser is to prevent the escape of this volatile ether and to allow of its complete saponification.

If the water used to dissolve the soap is added too rapidly, the soap may be decomposed with the liberation of the fatty acids: $C_3H_7\ COOK + H_2O = C_3H_7\ COOH + KOH$.

The fatty acids are set free at the proper time by means of sulphuric acid, and the volatile acids distilled off and titrated. The pumice is added to prevent explosive boiling.

The whole of the volatile acids do not pass over into the distillate, but only a part, the amount depending upon the

rate of distillation and the volume of the distillate. Hence, in order to get uniform results, it is necessary to follow the prescribed procedure with great care.

(1a) **Method of Leffman and Beam. — In order to** shorten the time required for the saponification and subsequent removal of the alcohol, Leffman and Beam * have proposed the use of a solution of sodium hydroxide in glycerine as the saponifying agent.

Directions.—To the fat, weighed out into a 250-c.c. flask, as in the Reichert-Meissl method, add 20 c.c. of the glycerine-soda solution and heat the flask over a lamp. Boil the mixture gently until all the water has been driven off and the liquid becomes perfectly clear, which will usually be the case in about five minutes. Care should be taken to avoid loss from spattering. Allow the flask to cool somewhat, and dissolve the soap in 135 c.c. of boiled distilled water. Add the first portions of water drop by drop, shaking the flask each time to avoid foaming. When the soap is dissolved, add 5 c.c. of sulphuric acid (1:4), two pieces of pumice, and carry out the distillation without previous melting of the fatty acids. The distillation and titration are completed as in the Reichert-Meissl process.

(2) **Hehner's Method for Direct Determination of the Fixed Fatty Acids.** — *Directions.*—To the portion of 2.5 grams weighed out into the 500-c.c. beaker add 1 c.c. of caustic potash and 20 c.c. of 95 per cent. alcohol. Cover the beaker with a watch-glass and heat it on the water-bath until the liquid is clear and homogeneous. As it is not essential to prevent the escape of the volatile acids, the use of a return-flow condenser is not necessary. Evaporate off the alcohol on the water-bath and dissolve the soap in about

* "Analysis of Milk and Milk Products" (Philadelphia, 1896), p. 78.

400 c.c. of warm distilled water. When the soap is completely dissolved add 10 c.c. of hydrochloric acid (sp. gr. 1.12), and heat the beaker in the water-bath almost to boiling until the clear oil floats. Meanwhile dry and weigh a thick filter in a small covered beaker. Allow the solution to cool until the fat forms a solid cake on top; filter the clear liquid and finally bring the solid fats upon the weighed filter. Wash the beaker and fat thoroughly with cold water, then wash out the fat adhering to the beaker with boiling water, which is poured through the filter, taking care that the filter is never more than two-thirds full. Cool the funnel by plunging it into cold water, remove the filter, place it in the weighing-beaker and dry it at 100° to constant weight. The fat should be heated about an hour at first, then for periods of about fifteen minutes, until the weight is constant within 2 mgs.

Notes.—87.5 per cent. is usually taken as the proportion of fixed fatty acids in butter-fat; 88 and 89 per cent. have been frequently found. All other fats yield from 95 to 96 per cent. of insoluble fatty acids.

(3) **Determination of Iodine Value.**—This method is based on the fact that certain of the fatty acids, notably the "unsaturated acids," as oleic acid, $C_{17}H_{33}COOH$, take up the halogens with the formation of addition products.

Directions.—Dissolve the fat in the 300-c.c. bottles in 10 c.c. of chloroform. Add 30 c.c. of the iodine solution from a pipette or glass-stoppered burette, and allow the bottles to stand with occasional shaking for fifteen minutes. Add 10 c.c. of 20 per cent. potassium iodide solution, then 100 c.c. of distilled water, and titrate the excess of iodine with $\frac{N}{10}$ sodium thiosulphate until the solution is faintly yellow. Add a few drops of starch solution and titrate to

the disappearance of the blue color. Calculate the result in grams of iodine absorbed by 100 grams of fat. This is called the Iodine Number, or Iodine Value.

At the time of making the determination carry out two "blanks" in exactly the same way except that no fat is used and only 20 c.c. of the iodine solution is added.

Standardization of the Thiosulphate Solution.—As this is not permanent, its strength should be determined by means of the standard potassium bichromate solution, 1 c.c. of which is equivalent to 0.01 gram of iodine.

Measure 20 c.c. of the potassium bichromate from a pipette into an Erlenmeyer flask. Add 5 c.c. of potassium iodide, 100 c.c. of water, and 5 c.c. of strong hydrochloric acid, and shake the flask for three minutes. Titrate the liberated iodine with the thiosulphate solution until the color has almost disappeared, then add starch solution and continue the titration until the blue color changes to a sea-green, due to the formation of chromium chloride. The iodine is liberated in accordance with the following equation:

$$K_2Cr_2O_7 + 14HCl + 6KI = 8KCl + 2CrCl_3 + 7H_2O + 6I.$$

Calculation of Results.—Example.—From the standardization,

16.07 c.c. thiosulphate = 20 c.c. bichromate = 0.200 gram I;
1 c.c. thiosulphate = 0.0125 gram I.

Also, from blank,

20 c.c. iodine solution = 42.40 c.c. thiosulphate;
1 c.c. iodine solution = 2.12 c.c. thiosulphate.

If 30 c.c. iodine solution have been added to 0.6542 grams of fat, then $30 \times 2.12 = 63.60$ c.c. is the equivalent amount of thiosulphate solution; and if 44.85 c.c. thiosulphate were used to titrate excess of free iodine, $63.60 - 44.85 = 18.75$ c.c. is the amount of thiosulphate equivalent

to the iodine combined with the fat. Then, since 1 c.c. thiosulphate is equivalent to 0.0125 gram free iodine, $\frac{18.75 \times 0.0125}{0.6542} \times 100 = 35.83$ grams of iodine combined with 100 grams fat.

Notes.—It is assumed that 100 grams of pure butter-fat absorb 30–40 grams iodine; oleomargarine, 63–75 grams; olive-oil, 83 grams; and cottonseed-oil, 106 grams.

The products formed by the action of iodine on the fats are mainly addition products with a slight proportion of substituted bodies. Thus the unsaturated *olein*,

$$(C_{17}H_{33}COO)_3C_3H_5,$$

takes up six atoms of iodine, forming an addition product, *di-iodo-stearin*, $(C_{17}H_{33}I_2COO)_3C_3H_5$.

The method in general use for determining the iodine value of fats and oils has been that of Baron Hübl,* an alcoholic solution of iodine and mercuric chloride being used as the reagent. The method here described, due to Hanus†, has the advantage that the solutions keep better, remaining practically unchanged for several months, and that the action is about sixteen times as rapid. For the fats and for oils with low iodine values the results are very close to the figures obtained by the Hübl process. If it is desired to carry out the determination by the older method, directions can be found in any standard work on the analysis of oils.

Great care should be taken that there is no change in temperature between the time of measuring the solution of iodine for the blanks and for the determinations, since the

---

* *Ding. Poly. J.*, 253, 281; *J. Soc. Chem. Ind.*, 3 (*1884*), 641.

† *Ztschr. Unters. Nahr. u. Genussm.*, 4 (*1901*), 913.

high coefficient of expansion of acetic acid may cause a material error.

Simple Tests for Detecting Oleomargarine and Renovated Butter.—(*a*) *The Spoon Test.*—Melt a piece of the sample as large as a small chestnut in an ordinary tablespoon or a small tin dish. Use a small flame and stir the melting fat with a splinter of wood (such as a match). Then increase the heat so that the fat shall boil briskly, and stir *thoroughly*, not neglecting the outer edges, several times during the boiling.

Oleomargarine and renovated butter boil noisily, usually sputtering like a mixture of grease and water when boiled, and produce little or no foam. Genuine butter usually boils with much less noise and produces an abundance of foam. The difference in regard to the foam is very marked.

(*b*) *The Waterhouse Test.**—Half fill a 100-c.c. beaker with sweet milk, heat nearly to boiling, and add from 5 to 10 grams of the sample. Stir with a small wooden rod about the size of a match until the fat is melted. Then immerse the beaker to about a third of its height in water in which are several large pieces of ice. Stir the milk until the temperature falls sufficiently for the fat to congeal. At this point the fat, if oleomargarine, can easily be collected together into one lump by means of the rod, while, if butter, it will granulate and cannot be so collected. The distinction is very marked.

The stirring should be continuous as the fat is solidifying and for a short time before.

The milk should be well mixed before pouring into the beaker, since otherwise cream may be taken from the top and contain so much butter-fat as to vitiate the test for

* Parsons: *J. Am. Chem. Soc.*, 23 (*1901*), 200.

oleomargarine. Skimmed milk is best, though not so convenient.

Notes.—These simple methods are of value for giving a quick decision regarding a sample, and are especially useful for the detection of renovated butter. The differences in the composition of butter-fat brought about by renovation are so slight that chemical methods are here of no avail.

The spoon test, however, will distinguish in the great majority of cases between genuine butter on the one hand and oleomargarine and renovated butter on the other; the Waterhouse test enables one to distinguish between the two last named.

The tests are so simple that they have been adopted for household use.*

Physical Methods. — *Microscopic Examination.* — Pure, fresh butter is not ordinarily crystalline in structure. Butter which has been melted, however, and fats which have been liquefied and allowed to cool slowly show a distinct crystalline structure, especially by polarized light. If only fresh butter were sold, and all adulterants had been previously melted and slowly cooled, this method would be all that would be necessary for the detection of adulteration. As it is, however, it is most useful in making comparative examinations of samples which have been subjected to the same conditions. From an examination of the accompanying plate,† which shows the appearance by polarized light of four samples of known origin which were melted and cooled slowly under exactly similar conditions, it will be seen that, while the differences are noticeable, they are not sufficient in all cases to form a basis for absolute identification.

For a further discussion of this point the student is re-

* Patrick *U. S. Dept. Agr., Farmers' Bulletin No. 131.*

† From photomicrographs by A. G. Woodman and A. I. Kendall, 1900.

ferred to Bulletin 13, U. S. Dept. Agr., Part I, pp. 29–40; Part IV, pp. 449–455.

Specific Gravity.—This is most conveniently determined at 100° C. by means of the Westphal balance (see Allen, *The Analyst*, **11**, 223; also Bull 13, Part IV, pp. 430–431). The pyknometer method is, however, the one adopted by the Association of Official Agricultural Chemists, to whose report (Bulletin 46, Rev. Ed., 1899, p. 51) reference is made.

Melting-point.—This is best determined according to the directions given in the Bulletin just mentioned (46), p. 52.

Refractive Index.—The degree to which light is refracted differs with various fats, and these differences are often of considerable analytical value. See Bulletin 46, Rev. Ed., p. 49, for a description of the method employed in its determination.

Determination of Water. — *Directions.* — Weigh 2 grams of butter into a shallow platinum dish having a flat bottom two inches in diameter and containing a slender stirring-rod two and a half inches long. Heat the butter in the oven at 100° C. for thirty minutes, cool in a desiccator, and weigh. Heat again for periods of fifteen minutes, until the weight remains constant. During the process of heating stir the butter frequently to hasten evaporation of the water.

Note.—The loss in weight is calculated as water, although a portion of the volatile acids is also lost, the amount depending upon the time of heating.

Determination of Salt.—*Directions.*—Weigh 10 grams of butter in a small beaker, add 30 c.c. of hot water, and when the fat is completely melted transfer the whole to a separatory funnel. Shake the mixture thoroughly, allow the fat to rise to the top, and draw off the water, taking care that none of the fat-globules pass the stopcock. Repeat the operation four times, using 30 c.c. of water each time. Make

B

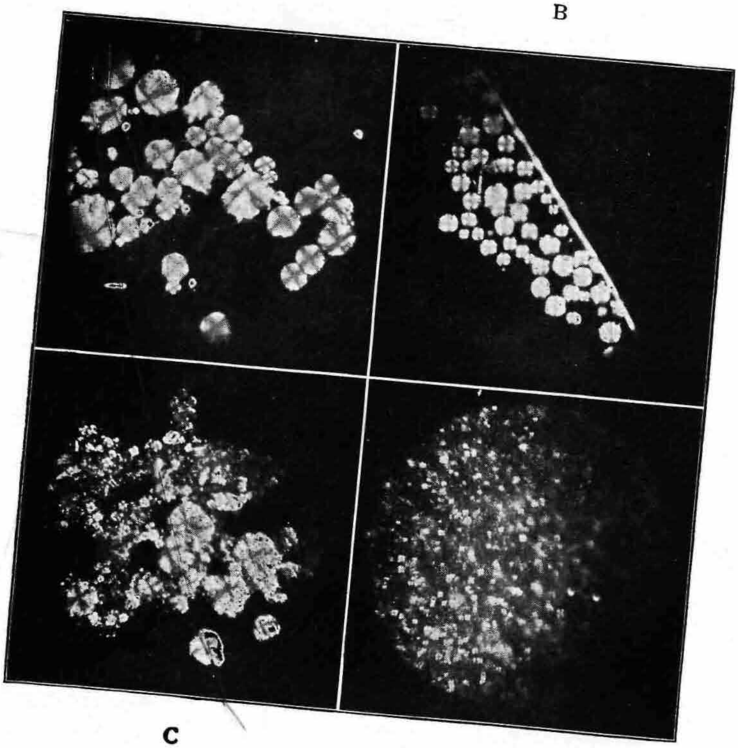

C

D

A. Butter × 30.
C. Oleomargarine × 30.

B. Beef-fat × 30.
D. Lard × 30.

the washings up to 250 c.c., mix thoroughly, and titrate 25 c.c. in a six-inch porcelain dish, using $\frac{N}{20}$ silver nitrate with potassium chromate as an indicator.

Complete Analysis of Butter in One Sample.—*Directions.*—Weigh about 2 grams of butter into a platinum Gooch crucible, half-filled with ignited fibrous asbestos, and dry it at 100° C. to constant weight. The loss in weight is the amount of *water*. Then treat the crucible repeatedly with small portions of petroleum ether, using gentle suction, and again dry it to constant weight. The difference between this and the preceding weight will be the amount of *fat*. Now carefully heat the crucible over a small flame or in a muffle until a light grayish ash is obtained. The loss in weight is the amount of *curd*, and the residual increase in weight over that of the crucible and asbestos is the *ash*. If desired, the *salt* may be washed out of the ash and determined by titration with silver nitrate after neutralizing the solution with calcium carbonate.

Detection of Coloring Matters.—The vegetable colors, such as annatto, carrot extract, and saffron, used in the past to color butter and oleomargarine, have now been largely replaced by aniline colors, chiefly of the azo type. A preliminary examination will readily indicate which class of colors, if any, is present.

Directions.—In separate test-tubes dissolve two portions of the filtered fat of about 2 grams or more in ether. To one portion add 1 or 2 c.c. of dilute hydrochloric acid and to the other about the same amount of dilute caustic potash solution; shake both well and allow to stand. If one of the commonly used azo colors be present, the acid solution will be of a bright pink to a deep wine-red color, according

to the amount present; if, on the other hand, annatto be present, the potash solution will be colored more or less yellow. Having found the class to which the color belongs, it should be tested further. For the azo color the test with fuller's earth, as described by Geisler,* will be found satisfactory; for the vegetable colors the tests given by Martin † and by Cornwall ‡ should be used.

FLOUR, PREPARED CEREALS, ETC.

This class of foodstuffs is usually in a dry form and not liable to rapid change by micro-organisms, and the examination consists in the determination of their "food value." This may require a simple analytical process, as in the case of the quantity of nitrogen in a sample of "gluten" sold for diabetic patients, or in the case of a brand of flour to be used in a hospital or State institution. It may also require an estimation of the available food-material, as in the case of two kinds of beans or corn.

Owing to the extensive use at present of various cereal breakfast foods, many of which are modified from their original composition by cooking or treatment with malt, the extent to which the starch has by this treatment been converted to soluble forms is also an important question for consideration. The actual determination of digestibility belongs to physiological chemistry and need not be taken into consideration here.

Moisture.—*Directions.*—Spread about 2 grams of the finely ground material in a thin layer on a watch-glass and dry it in the oven at 100° C. for five hours.

---

* *J. Am. Chem. Soc.*, 20 (*1898*), 110.
† *Analyst*, 12 (*1887*), 70.
‡ *Chem. News*, 55 (*1887*), 49.

Note.—With some substances drying in a current of hydrogen or some inert gas may be necessary, but for most cereals the method given will be found satisfactory.

Ash.—*Directions.*—Weigh about 2 grams into a platinum dish, such as is used for the determination of water in butter, and char it carefully. Ignite at a very low red heat until the ash is white, preferably in a muffle or radiator.

Note.—If a white ash cannot be obtained in this manner, exhaust the charred mass with water, collect the insoluble residue on a filter, burn it, add this ash to the residue from the evaporation of the aqueous extract and heat the whole at a low red heat until the ash is white.

Ether Extract: Fats and Oils.—*Directions.*—Place the residue from the determination of moisture, as described above, in an extraction-cone and extract it with pure anhydrous ether for sixteen hours. Evaporate off the ether and dry the residual fat at a low temperature to constant weight.

Total Proteids: Determination of Nitrogen by the Kjeldahl Process.*—*Principle.*—Oxidation of carbon and hydrogen, and conversion of organic nitrogen to ammonium sulphate by means of boiling sulphuric acid in presence of mercury, the latter acting as a carrier of oxygen, and being converted to mercuric sulphate. Precipitation of mercury by potassium sulphide to prevent the formation of mercurammonium compounds when the solution is made alkaline. Setting free of ammonia by neutralization of the acid by potassium hydroxide. Distillation of ammonia into a measured quantity of $\frac{N}{10}$ hydrochloric acid. Titration of excess of acid.

Directions.—Transfer about 0.5 gram of the finely divided substance from a weighing-tube to a 750-c.c. round-bottomed flask, add 10 c.c. of concentrated sulphuric acid free

* *Ztschr. anal. Chem.*, 22 (*1883*), 366.

from nitrogen, and 0.2 gram of metallic mercury. Place a small funnel in the neck of the flask, which should be supported in an inclined position on wire gauze and heated with a small flame until frothing has ceased and the liquid boils quietly. Then increase the heat and boil the solution for half an hour after it becomes colorless. Allow the flask to cool for a minute or two, and add a few crystals of potassium permanganate until the liquid has acquired a slight green or purple color. Meanwhile free the distilling apparatus from ammonia by distillation with pure water until a slight color only is given to 50 c.c. of the distillate by Nessler's reagent.

Measure 25 c.c. of $\frac{N}{10}$ hydrochloric acid from a burette into a 300-c.c. Erlenmeyer flask and place the condenser-tip beneath the surface of the liquid, adding a little water, if necessary, to seal it.

Rinse down the neck of the digestion-flask with 100 c.c. of ammonia-free water, add 20 c.c. of potassium sulphide solution, and connect the flask with the condenser. Add 100 c.c. of caustic potash through the separatory funnel, and distil off the ammonia by steam. When 200 c.c. have distilled over, remove the collecting-flask, after rinsing off the condenser-tip with distilled water, and titrate the excess of acid with $\frac{N}{10}$ sodium hydroxide, using methyl orange or cochineal as indicator. A blank determination is made with 0.5 gram of cane-sugar in order to reduce any nitrates present in the reagents which might otherwise escape detection.

Notes.—The temperature during the digestion must be maintained at or near the boiling-point of the acid, since at a lower temperature the formation of ammonia is incomplete.

The process is considered by Dafert * to take place in four

* *Ztschr. anal. Chem.*, 24 (*1885*), 455.

steps: (1) the sulphuric acid takes the elements of water from the organic matter; (2) the sulphur dioxide produced by the action of the residual carbon on the sulphuric acid exercises a reducing action on the nitrogenous bodies; (3) the nitrogenous substances formed in this way are converted to ammonia by a process of oxidation; (4) the ammonia formed is fixed by the acid as ammonium sulphate.

In some cases the potassium permanganate is necessary to insure the complete conversion of the nitrogenous bodies into ammonia, although it is probable that its use is unnecessary in the majority of analyses.

The Kjeldahl process in the form outlined above is not applicable to the determination of nitrogen in the form of nitrates. In order to render it of more general application various modifications of the method have been proposed, the one generally used in this country being that suggested by Scovell.* In this method salicylic acid is used with the sulphuric acid, being converted by the nitrate into nitro-phenol. By the use of sodium thiosulphate or zinc-dust this is reduced to amido-phenol. The amido-phenol is transformed into ammonium sulphate by the heating with sulphuric acid, the use of mercury being absolutely necessary in this case to secure the complete transformation.

The per cent. of proteids may be found by multiplying the per cent. of nitrogen by an appropriate factor, the one in general use being 6.25. It is better to use a special factor for each cereal, however, using the factor 6.25 only when a special factor is not given. The factors for the common cereals are: wheat 5.70, rye 5.62, oats 6.31, maize 6.39, and barley 5.82.

Qualitative Tests for Proteids.—(*a*) *Biuret Reaction.* —To a small quantity of the solution add about 1 c.c. of di-

* U. S. Dept. Agr., Bull. 16 (*1887*), 51.

lute (4 per cent.) copper sulphate solution and then a considerable excess of strong caustic potash or soda. A violet color is produced. The test is generally known as the biuret reaction because the substance *biuret*, $C_2H_6N_3O_2$, left on heating urea to 160° C., gives the color under the same conditions. If too much of the copper sulphate solution be used, its color may conceal that of the reaction.

(*b*) *Xanthoproteic Reaction.*—Strong nitric acid produces a yellow coloration of proteid matter, which is intensified on warming. On treating the yellow mixture with ammonia in slight excess the color is changed to an orange or red tint.

(*c*) *Millon's Reaction.*—When proteid matter is boiled with Millon's reagent (see page 211), a brick-red coloration is produced. A similar reaction is given by gelatin and allied bodies.

(*d*) *Liebermann's Test.*—Heat the solid proteid with concentrated hydrochloric acid. It will dissolve with the gradual formation of a blue coloration, changing to violet and brown.

(*e*) *Adamkiewicz Reaction.*—If glacial acetic acid in excess and then strong sulphuric acid are added to a proteid, a violet color with faint fluorescence is produced.

Note.—Since many other substances give a test with certain of the reagents employed to test for proteids, it will be obvious that a proteid can be identified with certainty only by employing a large number of its reactions.

Separation of the Proteids of Wheat.—Crude "gluten" is readily obtained from flour by kneading a quantity of it in a thin stream of cold water until the starch and soluble matter are removed. But the resulting mass is not a definite product, but composed of various nitrogen substances. For a description of these and for methods of separation the student is referred to the official bulletins.

Carbohydrates.—The *total carbohydrates*, often stated in analyses as "nitrogen-free extract," may be readily obtained by subtracting from 100 the sum of the per cents. of the other constituents, viz., moisture, ash, ether extract, and nitrogenous bodies. In many cases, however, especially with the cooked or treated cereals and with such classes of cereal preparations as infant or invalid foods, a further study of the carbohydrates is desirable. These are made up of two general classes: (*a*) *soluble carbohydrates*, including sugars, as sucrose, dextrose and maltose, dextrin and soluble starch, by the latter term being meant starch which is soluble in water but still gives the characteristic blue color with iodine, in distinction from some of the more completely broken-down forms like dextrin, which no longer give blue or purple colors with iodine; (*b*) *insoluble carbohydrates*, including starch, pentosans, lignin bodies, and cellulose. The three latter occur chiefly in the husk or envelope of the grain or in the woody fibre of the plant. The pentosans or gums are distinguished from one another by the formation of specific sugars upon hydrolysis with acids. For ordinary analytical purposes it is sufficient to determine the lignin and cellulose together as "crude fibre." Since the exact procedure to be followed in the determination of the carbohydrates varies largely with each specific case, only a general outline can be presented here.

Sugars.—The finely ground material, previously dried and extracted with ether for the removal of crude fat, is extracted with 85 per cent. alcohol. In the extract the reducing sugars may be determined by means of Fehling's solution as described on page 181, and the sucrose determined in the same way after inversion with hydrochloric acid.

Dextrin and Soluble Starch.—The residue from the ex-

traction of the sugars is treated for eighteen to twenty-four hours with water at laboratory temperature with frequent agitation, made up to definite volume, and filtered. This may be tested with iodine, and if no blue color is produced, evaporated to small volume, and the dextrin converted to dextrose by dilute hydrochloric acid and determined by Fehling's solution. In some few cases, however, a blue color with iodine may indicate the presence of soluble starch, in which case an aliquot part of the filtrate may be treated with an excess of barium hydroxide to precipitate the starch. In the filtrate from this precipitate the dextrin is determined by inversion and copper reduction as before. The difference between the dextrin thus found and the first determination gives the soluble starch.

Starch.—The methods for the determination of starch vary with the condition in which the starch is found. In the case of nearly pure starch it may be converted into dextrose by boiling with dilute acid, the dextrose being then determined by Fehling's solution in the usual way. Hot acids, however, cannot be used to convert starch in the natural state, as it is found in cereals, because other carbohydrate bodies become soluble under these conditions. In such cases the starch is brought into solution by treatment with diastase or by heating with water under pressure.

For the rapid estimation of starch in cereals the following method has been found useful: *

Principle.—Conversion of starch to dextrin and maltose, that is, solution of the starch, by diastase in malt extract. Conversion of dextrin and maltose to dextrose by acid (hydrolysis).

Directions.—Place about a gram of the finely divided sample, the residue from the extraction of sugar, for example, in a flask, add 50 c.c. of water, 3 c.c. of malt extract, and

* Hibbard: *J. Am. Chem. Soc.*, 17 (*1895*), 64.

boil for one minute, with frequent shaking. Cool the solution to 55°–60° C., add 3 c.c. of malt extract, and heat slowly so that fifteen minutes are required to reach the boiling-point. Cool again and test the solution for starch by placing a drop upon a porcelain tile and adding a drop of solution of iodine in potassium iodide. Should a blue color appear, add more malt extract and repeat the heating until all the starch has been converted. Cool the solution, make it up to 100 c.c., and filter it through fine linen or cotton cloth. To an aliquot part of the filtrate, 25 or 50 c.c., in a flask, add 5 c.c. of hydrochloric acid (sp. gr. 1.15), and enough water to make the volume 60 c.c. Place a small funnel in the neck of the flask to retard evaporation, and boil the solution gently for exactly half an hour. Cool the solution, add sodium hydroxide until nearly neutralized, make up to a definite volume, filter, and determine the dextrose by Fehling's solution. Convert the dextrose to starch by the factor 0.92. A blank determination should be carried through under the same conditions and using the same quantities of reagents, in order to make a correction for the sugar in the malt extract.

Malt Extract.—Treat coarsely pulverized dry malt for several hours with sufficient 20 per cent. alcohol to cover it. The solution is then filtered and may be kept for two weeks without losing its diastatic power.

Notes.—If the determination is made directly on the original substance, this should first be extracted on a hardened filter with five successive portions of 10 c.c. of ether, then washed with 150 c.c. of 10 per cent. alcohol, and finally washed with a little strong alcohol.

The addition of malt extract before gelatinizing the starch, and the frequent shaking, helps to prevent the formation of insoluble clots of starch, as it acts above the tem-

perature at which starch becomes pasty. If, however, the material contains little starch in the presence of much fibrous material, nothing is gained by adding malt before heating to boiling, since most of the diastase is destroyed by the high temperature before it has had time to act on the starch.

If the malt itself is not readily procurable, certain forms of prepared diastase are on the market and may be found more convenient either for analytical use or for purposes of illustration. When possible, however, it is preferable to use the freshly prepared malt extract, as the prepared diastase, made at different times and from separate portions of malt, may show great differences in hydrolytic power.

Pentosans.—These are determined usually directly upon the original material. The methods in general use depend upon the conversion of the pentose substance into furfurol by distillation with strong acid and the subsequent precipitation and estimation of the furfurol. The latter may be done by treatment with phenylhydrazine acetate and formation of the furfurol hydrazone, or by the formation of an insoluble condensation product with phloroglucin according to the method of Councler.

For the details of these methods reference may be made to Wiley, "Principles and Practice of Agricultural Analysis," Vol. III, p. 178 *et seq.*, also an article by Sherman.* The phloroglucin method is given as a provisional method in Bull. 46 [Rev. Ed.] of the Bureau of Chemistry. It should be noted, however, that the method of filtering and drying the phloroglucid should be modified in accordance with the directions of Krober.† See also Bull. 73 of the Bureau of Chemistry, p. 173.

* *J. Am. Chem. Soc.*, 19 (*1897*), 291.
† *Ztschr. angew. Chem.* (*1902*), 477.

Crude Fibre.—The Weende method, the method adopted by the Association of Official Agricultural Chemists, is based on the assumption that the starch and other digestible carbohydrates and proteid will be removed from the cereal by successive digestion at a boiling temperature with acid and alkali of a definite strength. The complex body thus obtained is not a definite chemical compound, but may be considered as being composed largely of cellulose. Directions for the carrying out of the method will be found in Bull. 46, before mentioned. The tedious filtration will be helped by following the directions of Thatcher.*

EXAMINATION OF FERMENTED LIQUORS.

WINE.

General Statements.—The object of a wine analysis is ordinarily to determine whether or not a wine is pure and unadulterated, or whether it has been properly made. Special works furnish sufficient information concerning processes of manufacture, and it is essential to know here only the general composition of the grape-juice or "must" and how, by the natural process of fermentation, this may be altered in the finished product.

The "must" contains *sugars* (mainly dextrose); dextrin; *organic acids and salts,* mainly tartaric and malic acids; salts of inorganic acids, chiefly phosphates, sulphates, and chlorides. Various *extractive matters*, which largely affect the color and flavor of the wine, together with a little *tannin* and albuminous substances, are also present. The wine will contain then, besides water, the following: *Alcohol, glycerine,* frequently some *sugar* that has escaped fermentation, *ethers,*

---

* *J. Am. Chem. Soc.*, 24 (*1902*), 1210.

which determine largely the "bouquet" of the wine, and more or less of the acids, salts, coloring and extractive matters of the must, together with varying amounts of carbonic, acetic, and succinic acids.

According to differences in their composition wines may be divided into various classes, such as "dry" wines, which contain very little sugar, as distinguished from the sweet wines, in which a notable quantity of sugar has escaped fermentation, or to which an addition of sugar has been made subsequent to the main fermentation. Or they may be divided according to the content of alcohol into natural wines and those *fortified* by addition of alcohol, as port, sherry, and madeira.

The composition of the wine may be changed, moreover, by the various methods which are used for its "improvement," such as *fortification* already mentioned, *plastering*, *petiotization*, etc. Information regarding these methods will be found in some of the larger works mentioned in the bibliography.

The determinations of most value in judging the purity of wine are alcohol, glycerine, extract, ash, total and volatile acids. The actual percentages of these substances are not of so great value as certain relations between them, such as the ratio of ash to extract, extract to alcohol, alcohol to glycerine, alcohol to acids, and volatile to total acids. Examination for preservatives and foreign coloring matters should also be made. It should be remembered, however, in judging the quality of American wines that the standards of European practice are not entirely applicable and that further study will be necessary before even tentative standards can be fixed.

Specific Gravity.—This is to be taken by means of the Westphal balance or Sprengel tube at 15°.5 C.

Notes.—Where the specific gravity of the sample is known, the various portions taken for analysis can be more conveniently measured than weighed. The results can be calculated to per cent. by weight by dividing the results expressed as grams per 100 c.c. by the specific gravity. Apart from this the determination has no special value.

Effervescing wines should, before analysis, be vigorously shaken in a large flask to hasten the escape of carbon dioxide. The liquid may then be poured from under the foam into another vessel.

Alcohol by Weight.—*Principle.*—The alcohol is obtained freed from everything but water, and its amount determined by ascertaining the specific gravity of the mixture, and taking the per cent. from tables.

Directions.—Measure (or weigh) 100 c.c. of the wine into a 500-c.c. round-bottomed flask. Add 50 c.c. of water, neutralize free acid with $\frac{N}{10}$ sodium hydroxide, and add 0.5 gram of tannin, if necessary, to prevent foaming. Distil off about 95 to 98 c.c. into a 100-c.c. graduated flask. Fill up to the mark with distilled water, mix thoroughly, and take the specific gravity of the distillate at 15°.5 C. with a pyknometer. The percentage of absolute alcohol by weight corresponding to the observed density will be found in Table X, page 230.

Example.—If A is the percentage of absolute alcohol in the sample, a that in the distillate, W and w the weights of the sample and distillate respectively, then $A = \frac{wa}{W}$.

Notes.—The object of neutralizing the wine with sodium hydroxide is to prevent the distillation of volatile acids, principally acetic. A certain amount of volatile ethers may also pass over into the distillate, but in most cases it is so slight that its influence may be neglected.

Pure wines ordinarily contain between 4.5 and 12 per cent. of alcohol except in the case of "fortified" wines, where the amount may be even 20 per cent. Fermentation does not yield more than about 14 per cent. of alcohol.

Extract.—The method to be employed depends on the proportion of extract. A preliminary calculation should be made by the aid of the formula

$$x = 1 + d - d';$$

where x is the specific gravity of the dealcoholized wine, d the specific gravity of the wine, and d' the specific gravity of the distillate obtained in the determination of alcohol. The value for x is found from Table XI, page 232.

Dry Wines.—(Having an extract content of less than 3 per cent.) Evaporate 50 c.c. on the water-bath to a sirupy consistency in a flat-bottomed platinum dish. Heat the residue in the oven at 100° C. for two hours and a half, cool in a desiccator and weigh.

Sweet Wines.—When the extract content is between 3 and 6 per cent. treat 25 c.c. of the sample as described under dry wines. When the amount of extract exceeds 6 per cent. it is best to accept the result found from the table and not to determine it gravimetrically.

Notes.—The gravimetric determination will be inaccurate with wines high in extract on account of the serious error caused by drying levulose at high temperatures. The figures in the table are based on determinations made at 75° C. in vacuo.

Wine made from the juice of ripe grapes rarely contains less than 1.5 per cent. of extract in the case of white wines and about 2.0 per cent. in the case of red wines. The amount of extract decreases of course with age.

Alcohol-extract Ratio.—The municipal laboratory of

Paris considers a wine "fortified" if the alcohol exceeds 4.5 times the extract for red wines and 6.5 for white wines. The amount of added alcohol is calculated by the municipal laboratory by subtracting the "natural" alcohol (extract ×4.5 or 6.5) from the total alcohol.

Ash.—Ignite the residue from the extract determination as described in the note on page 203.

Note.—The amount of ash in a natural wine averages about 10 per cent. of the extract, varying ordinarily between 0.14 per cent. and 0.35 per cent.

Glycerine.—Evaporate 100 c.c. of wine in a porcelain dish on the water-bath to a volume of about 10 c.c., and treat the residue with about 5 grams of fine sand and with from 1.5 to 2 c.c. of milk of lime (containing 40 grams $Ca(OH)_2$ per 100 c.c.) for each gram of extract present, and evaporate almost to dryness. [With wines whose extract exceeds 5 grams per 100 c.c., heat the portion to be used in the determination of glycerine to boiling in a flask, and treat with successive small portions of milk of lime until it becomes, first, darker, and then light in color. When cool, add 200 c.c. of 96 per cent. alcohol (sp. gr. 0.8118), allow the precipitate to subside, filter, and wash with 96 per cent. alcohol (sp. gr. 0.8118). Evaporate the filtrate to about 10 c.c., add about 5 grams of sand and from 1.5 to 2 c.c. of milk of lime, and proceed as before.] Treat the moist residue with 5 c.c. of alcohol (96 per cent. by volume), remove the substance adhering to the sides of the dish with a spatula, and rub the whole mass to a paste, with the addition of a little more alcohol. Heat the mixture on the water-bath, with constant stirring, to incipient boiling, and decant the liquid into a flask graduated at 100 and 110 c.c. Wash the residue repeatedly by decantation with 10 c.c. portions of hot 96 per cent. alcohol. Cool the con-

tents of the flask to 15°, dilute to the 110-c.c. mark with 96 per cent. alcohol, and filter through a folded filter. Evaporate 100 c.c. of the filtrate to a sirupy consistency in a porcelain dish, on a hot, but not boiling, water-bath, transfer the residue to a small glass-stoppered graduated cylinder with 20 c.c. of absolute alcohol, and add three portions of 20 c.c. each of absolute ether, with thorough shaking after each addition. Let stand until clear, then pour off through a filter, and wash the cylinder three times or more with a mixture of one part absolute alcohol to one and one-half parts of absolute ether, pouring the wash-liquor also through the filter. Evaporate the filtrate to a sirupy consistency, dry for one hour at the temperature of boiling water, weigh, ignite, and weigh again. The loss in ignition increased by one-tenth gives the glycerine.

Notes.—The ratio of glycerine to alcohol is of great importance in judging the purity of a wine. According to European standards in pure wines the glycerine-alcohol ratio varies from between 6 and 14 parts by weight of the former to 100 of the latter. The little work done on American wines indicates a lower ratio.

Free Acids: Total Acidity Calculated as Tartaric Acid.—Titrate 10 c.c. of the wine with $\frac{N}{10}$ sodium hydroxide. The end-point is reached when a drop of the liquid placed upon faintly-red litmus paper produces a blue spot in the middle of the portion moistened. Calculate the results as tartaric acid. One c.c. $\frac{N}{10}$ sodium hydroxide = 0.0075 gram of tartaric acid.

Volatile Acids Calculated as Acetic Acid.—Measure 50 c.c. of wine into a 300-c.c. flask provided with a cork having two perforations. One is fitted with a tube 6 mm. in

diameter and blown out to a bulb 40 mm. in diameter a short distance above the cork; this tube is connected with a condenser. The other perforation carries a tube reaching nearly to the bottom of the flask and drawn out to a small aperture at its lower end; this is connected with a 500-c.c. flask containing water. Heat both flasks to boiling; then lower the flame under that containing the wine and continue the distillation by means of steam until 200 c.c. have gone over. Titrate the distillate with $\frac{N}{10}$ sodium hydroxide, using phenolphthalein as an indicator. Calculate the results as acetic acid. One c.c. $\frac{N}{10}$ sodium hydroxide = 0.0060 gram of acetic acid.

Fixed Acids Calculated as Tartaric Acid. — These may be found by calculating the volatile acids as tartaric and subtracting the result from the total tartaric acid found by direct titration.

Note.—The total acids in a wine vary usually between 0.45 per cent. and 1.5 per cent. The acid content is frequently diminished by aging or by the separation of cream of tartar. The volatile acid should, in general, not be over 0.12 to 0.16 per cent., depending upon the age of the wine. A wine properly made should not have the volatile acid, estimated as acetic, exceed one-fourth of the total free acid, calculated as tartaric.

Coloring Matters: Detection of Aniline Dyes.—*Cazeneuve Reaction.*—Add 0.2 gram of freshly precipitated mercuric oxide to 10 c.c. of the wine, shake for one minute, and filter. Pure wines give a filtrate which is colorless or light yellow, while the presence of a more or less red coloration indicates an aniline color.

*Double Dyeing Method of Sostegni and Carpentieri.**—

* *Ztschr. anal. Chem.*, 35 (*1896*), 397.

Fifty c.c. of the sample are diluted to 100 c.c. with water, filtered if necessary, acidified with from 2 to 4 c.c. of 10 per cent. solution of hydrochloric acid, and a piece of woolen cloth which has been washed in a very dilute solution of boiling potassium hydroxide, and then washed in water, immersed in it and boiled for five to ten minutes. The cloth is removed, thoroughly washed in water, and boiled with very dilute hydrochloric acid solution. Then after washing out the acid the color is dissolved in a solution of ammonium hydroxide (1 to 50). With some of the dyes solution takes place quite readily, while with others it is necessary to boil some time. The wool is taken out, a slight excess of hydrochloric acid is added to the solution, another piece of wool is immersed and again boiled. With vegetable coloring matter this second dyeing gives practically no color, and there is no danger of mistaking a fruit color for one of coal-tar origin.

Notes.—It is absolutely necessary that the second dyeing should be made, as some of the coal-tar dyes will dye a dirty orange in the first acid bath which might be easily passed for vegetable color, but on treatment in alkaline bath and second acid bath becomes a bright pink.

Another advantage in the second dyeing is that if a large piece of woolen cloth is used in the first dyeing, and a small piece in the second dyeing, small amounts of coloring matter can be brought out much more decidedly in the second dyeing, where practically all of the vegetable coloring matter has been excluded.

Preservatives.—The preservatives most commonly employed in wines are salicylic and benzoic acids. For methods of detecting other substances, such as abrastol, hydronaphthol, etc., which are sometimes used, reference may be made to Bull. 65 of the Bureau of Chemistry. Boric acid is occa-

sionally used, but since a small amount of it is normally present in wines, tests, to be of value, should be quantitative.

Salicylic Acid.—Acidify about 50 c.c. of the wine with 5 c.c. of dilute (1:3) sulphuric acid, and extract with ether. Evaporate the ether extract to dryness spontaneously or at a very low heat. Treat the residue with one or two cubic centimeters of petroleum ether or gasolene and decant into a small test-tube. Add an equal volume of very dilute ferric chloride and shake the tube violently. In the presence of salicylic acid the aqueous layer will show a violet-red color.

Notes.—The treatment with petroleum ether is to separate the salicylic acid from tannic acid, which gives the same color with ferric chloride.

Not more than 50 c.c. should be used for the test, since a trace of salicylic acid seems normally present in some wines.

Benzoic Acid.—Acidify about 100 c.c. of wine with sulphuric acid as before, extract with ether, and test for benzoic acid as described on page 187.

Beer and Other Malt Liquors.—Before analysis the sample must be thoroughly shaken in a large flask, in order to remove carbon dioxide.

Specific Gravity.—Taken with a pyknometer or Sprengel tube at 15°.5 C.

Alcohol by Weight.—Determined as in the analysis of wine.

Extract.—Determine the extract content corresponding to the specific gravity of the dealcoholized beer according to Table XI. For this purpose employ the formula

$$Sp = g + (1 - g');$$

in which Sp is the specific gravity of the dealcoholized beer, g the specific gravity of the beer, and g' the specific gravity of the distillate obtained in the determination of alcohol. In

place of this formula, the residue from the distillation of alcohol is sometimes diluted to the original volume, and its specific gravity taken. This is often impracticable owing to the necessity of employing tannin to prevent foaming in the distilling flask, and owing to the coagulation of proteïds during the distillation.

Note.—The extract of beer cannot be accurately determined by evaporation and drying at the boiling-point of water because of the dehydration of the maltose.

Ash.—Evaporate 25 c.c. to dryness and determine as in the analysis of wine.

Free Acids.—Titrated as in the analysis of wine. Fixed acids, consisting principally of lactic and succinic, are calculated as lactic acid. Volatile acids are calculated as acetic acid. One c.c. of $\frac{N}{10}$ sodium hydroxide = 0.0090 gram of lactic acid.

Nitrogen.—Weigh out about 20 c.c. of the sample, transfer it to a 750-c.c. round-bottomed flask, and evaporate almost to dryness on the water-bath. Determine the nitrogen in the residue as on page 203.

APPENDICES.

APPENDIX A.

Table I.

TENSION OF AQUEOUS VAPOR IN MILLIMETERS OF MERCURY FROM 0° TO 30°.9 C., REDUCED TO 0° AND SEA-LEVEL.

	0°.0.	0°.1.	0°.2.	0°.3.	0°.4.	0°.5.	0°.6.	0°.7.	0°.8.	0°.9.
0°	4.57	4.60	4.64	4.67	4.70	4.74	4.77	4.80	4.84	4.87
1	4.91	4.94	4.98	5.02	5.05	5.09	5.12	5.16	5.20	5.23
2	5.27	5.31	5.35	5.39	5.42	5.46	5.50	5.54	5.58	5.62
3	5.66	5.70	5.74	5.78	5.82	5.86	5.90	5.94	5.99	6.03
4	6.07	6.11	6.15	6.20	6.24	6.28	6.33	6.37	6.42	6.46
5	6.51	6.55	6.60	6.64	6.69	6.74	6.78	6.83	6.88	6.92
6	6.97	7.02	7.07	7.12	7.17	7.22	7.26	7.31	7.36	7.42
7	7.47	7.52	7.57	7.62	7.67	7.72	7.78	7.83	7.88	7.94
8	7.99	8.05	8.10	8.15	8.21	8.27	8.32	8.38	8.43	8.49
9	8.55	8.61	8.66	8.72	8.78	8.84	8.90	8.96	9.02	9.08
10	9.14	9.20	9.26	9.32	9.39	9.45	9.51	9.58	9.64	9.70
11	9.77	9.83	9.90	9.96	10.03	10.09	10.16	10.23	10.30	10.36
12	10.43	10.50	10.57	10.64	10.71	10.78	10.85	10.92	10.99	11.06
13	11.14	11.21	11.28	11.36	11.43	11.50	11.58	11.66	11.73	11.81
14	11.88	11.96	12.04	12.12	12.19	12.27	12.35	12.43	12.51	12.59
15	12.67	12.76	12.84	12.92	13.00	13.09	13.17	13.25	13.34	13.42
16	13.51	13.60	13.68	13.77	13.86	13.95	14.04	14.12	14.21	14.30
17	14.40	14.49	14.58	14.67	14.76	14.86	14.95	15.04	15.14	15.23
18	15.33	15.43	15.52	15.62	15.72	15.82	15.92	16.02	16.12	16.22
19	16.32	16.42	16.52	16.63	16.73	16.83	16.94	17.04	17.15	17.26
20	17.36	17.47	17.58	17.69	17.80	17.91	18.02	18.13	18.24	18.35
21	18.47	18.58	18.69	18.81	18.92	19.04	19.16	19.27	19.39	19.51
22	19.63	19.75	19.87	19.99	20.11	20.24	20.36	20.48	20.61	20.73
23	20.86	20.98	21.11	21.24	21.37	21.50	21.63	21.76	21.89	22.02
24	22.15	22.29	22.42	22.55	22.69	22.83	22.96	23.10	23.24	23.38
25	23.52	23.66	23.80	23.94	24.08	24.23	24.37	24.52	24.66	24.81
26	24.96	25.10	25.25	25.40	25.55	25.70	25.86	26.01	26.16	26.32
27	26.47	26.63	26.78	26.94	27.10	27.26	27.42	27.58	27.74	27.90
28	28.07	28.23	28.39	28.56	28.73	28.89	29.06	29.23	29.40	29.57
29	29.74	29.92	30.09	30.26	30.44	30.62	30.79	30.97	31.15	31.33
30	31.51	31.69	31.87	32.06	32.24	32.43	32.61	32.80	32.99	33.18

TABLE II.

WEIGHT OF A CUBIC CENTIMETER OF CARBON DIOXIDE FROM 746 TO 778 MILLIMETERS PRESSURE AND FROM 10° TO 25° C. CORRECTED FOR THE TENSION OF AQUEOUS VAPOR.

(Extended from the Tables of Dietrich.*)

Millimeters.

	746	748	750	752	754	756	758	760	762	764	766	768	770	772	774	776	778	
10°	1.83936	1.84435	1.84934	1.85433	1.85933	1.86432	1.86931	1.87430	1.87930	1.88429	1.88928	1.89427	1.89926	1.90425	1.90924	1.91423	1.91922	10°
11	1.83134	1.83631	1.84129	1.84626	1.85123	1.85621	1.86118	1.86616	1.87113	1.87610	1.88108	1.88605	1.89103	1.89601	1.90098	1.90596	1.91094	11
12	1.82324	1.82820	1.83315	1.83811	1.84307	1.84802	1.85298	1.85793	1.86289	1.86785	1.87280	1.87776	1.88271	1.88767	1.89263	1.89758	1.90253	12
13	1.81521	1.82015	1.82510	1.83004	1.83499	1.83993	1.84488	1.84982	1.85477	1.85971	1.86466	1.86960	1.87455	1.87950	1.88444	1.88939	1.89434	13
14	1.80714	1.81208	1.81701	1.82194	1.82687	1.83181	1.83674	1.84167	1.84661	1.85154	1.85647	1.86141	1.86634	1.87127	1.87620	1.88113	1.88607	14
15	1.79880	1.80371	1.80861	1.81352	1.81843	1.82333	1.82824	1.83314	1.83805	1.84296	1.84786	1.85277	1.85767	1.86257	1.86748	1.87239	1.87729	15
16	1.79056	1.79545	1.80034	1.80523	1.81012	1.81501	1.81990	1.82479	1.82968	1.83457	1.83946	1.84435	1.84924	1.85413	1.85902	1.86391	1.86880	16
17	1.78216	1.78703	1.79189	1.79676	1.80163	1.80650	1.81136	1.81623	1.82110	1.82596	1.83083	1.83570	1.84056	1.84543	1.85030	1.85516	1.86003	17
18	1.77381	1.77867	1.78353	1.78838	1.79324	1.79809	1.80295	1.80781	1.81266	1.81752	1.82337	1.82723	1.83209	1.83694	1.84180	1.84666	1.85151	18
19	1.76530	1.77014	1.77498	1.77982	1.78466	1.78950	1.79434	1.79917	1.80401	1.80885	1.81369	1.81853	1.82337	1.82821	1.83305	1.83789	1.84273	19
20	1.75681	1.76113	1.76645	1.77127	1.77610	1.78092	1.78574	1.79056	1.79538	1.80021	1.80503	1.80985	1.81467	1.81949	1.82432	1.82914	1.83396	20
21	1.74818	1.75299	1.75780	1.76260	1.76741	1.77221	1.77702	1.78183	1.78663	1.79144	1.79624	1.80105	1.80586	1.81066	1.81547	1.82028	1.82508	21
22	1.73949	1.74428	1.74907	1.75386	1.75865	1.76344	1.76823	1.77302	1.77781	1.78260	1.78739	1.79218	1.79697	1.80176	1.80655	1.81134	1.81613	22
23	1.73068	1.73546	1.74023	1.74501	1.74978	1.75455	1.75933	1.76410	1.76888	1.77365	1.77842	1.78320	1.78797	1.79274	1.79752	1.80229	1.80706	23
24	1.72178	1.72654	1.73129	1.73605	1.74081	1.74556	1.75032	1.75508	1.75984	1.76459	1.76935	1.77411	1.77886	1.78362	1.78838	1.79314	1.79789	24
25	1.71277	1.71751	1.72225	1.72699	1.73173	1.73648	1.74122	1.74596	1.75070	1.75544	1.76018	1.76492	1.76967	1.77441	1.77915	1.78389	1.78863	25

* *Ztschr. anal. Chem.*, 4 (*1865*), 141.

TABLE III.

TABLE OF AVERAGE COMPOSITION OF WATERS. BASED ON MASSACHUSETTS DATA.

(Parts per Million.)

Class.	Turbidity and Sediment.	Odor.	Color.	Alb. Ammonia.	Free Ammonia.	Nitrites.	Nitrates.	Chlorine.	Hardness.	Total Solids.
Meteoric water (rain and snow).......	Slight to considerable.	None to tarry.	0.00	.010 to .150	.100 to .400	.000 to .003	.000 to .050	0.3 to 3.0	0.0	2.0 to 10.0
Water of brooks and ponds..........	"	Vegetable to grassy.	0.10 to 2.00	.100 to .400	.000 to .020	.000 to .002	.000 to .100	1.0 to 6.0	0.0 to 20.0	20.0 to 30.0
Unpolluted springs or ground-waters.	None.	None.	0.00	.000 to .010	.000	.000	.100 to .400	1.0 to 6.0	3.0 to 25.0	20.0 to 40.0
Sewage...........	Decided milky to thick dirty.	Offensive.	0.3 to 0.7	1.50 to 4.50	10.000 to 20.000	.000 to .500	.000 to .100	30.0 to 60.0	30.0 to 50.0	250.0 to 450.0
Sand-filtered effluent	None.	None.	0.00	.020 to .100	.000 to .050	.000 to .002	5.000 to 15.000	30.0 to 60.0	35.0 to 55.0	150.0 to 250.0
Polluted rivers.....	Distinct to decided.	Musty to offensive.	0.4	.286 to 1.200	.210 to .500	.010 to .060	.300 to .550	9 7 to 18.0	40.0 to 50.0	77.0 to 90.0
SPECIAL EXAMPLES.										
Polluted wells, No. 1.	None.	None.	0.00	.034	.182	.004	10.000	34.4	94.0	279.0
" " " 2.	"	Dist. mouldy.	0.00	.080	5.760	.020	7.000	28.1	36.0	166.0
" " " 3.	Milky.	Dec. musty and disagreeable.	0.10	.220	16.800	.001	.250	14.4	25.0	120.0
Purified ground-waters, No. 1......	None.	None.	0.00	.062	.000	.000	16.665	29.0	91.0	224.0
Purified ground-waters, No. 2......	"	"	0.00	.004	.000	.000	5.000	20.0	130.0	250.0

TABLE IV.

NORMAL WATERS FROM VARIOUS PARTS OF NORTH AMERICA.

(Parts per Million.)

No.		Color.	Total Residue	Ammonia. Albuminoid.	Ammonia. Free.	Nitrogen as Nitrites	Nitrogen as Nitrates	Chlorine.	Hardness.	Ox. Cons.	Iron.
1	Brook, Nova Scotia	2.20	58.0	.262	.012	.000	.020	......	6.0	......	......
2	Spring, off coast of Maine	0.0	111.0	.018	.000	.000	.380	16.7	50.0	.234	......
3	" Mooselauke, N. H.	0.0	25.5	.034	.000	.000	.010	0.5	13.0	......	......
4	Small stream, Vermont	.05	188.5	.040	.016	.000	.030	0.8	191.0	.780	......
5	Cistern, Massachusetts	.05	30.5	.136	.032	.000	.030	2.5	17.0	......	......
6	Driven well, coast of Massachusetts	1.2	110.0	.120	.380	.001	.000	24.0	50.0	1.026	1.63
7	" " " " "	0.5	54.0	.028	.002	.000	.000	4.7	28.0	.390	......
8	Spring, Central Massachusetts	0.0	54.0	.004	.000	.000	.020	1.8	22.0	.000	......
9	Small stream, New York	.42	31.5	.070	.000	.000	.070	0.8	6.0	......	......
10	Lake, Adirondack Mts	.12	24.0	.064	.000	.000	.000	0.4	15.0	......	......
11	Reservoir, Newark, N. J.	.18	47.0	.116	.002	.001	.200	2.0	24.0	......	......
12	Driven well, South Carolina	0.0	55.0	.046	.010	.000	.600	2.2	17.0	......	......
13	Spring, Georgia	.15	123.0	.052	.014	.001	.100	1.8	112.0	......	......
14	Mississippi River, in Missouri	.25	filtered 24.8	.546	.008	.010	.580	7.3	113.0	......	......
15	Deep well near Lake Superior	0.0	186.0	.006	.200	.000	.030	54.0	80.0	......	......
16	Missouri River, in Montana	.08	261.0	.020	.008	.000	.130	13.5	154.0	......	......
17	River Sac, Missouri	.05	210.0	.070	.032	.007	.500	2.0	156.0	......	......
18	Assiniboine, Winnipeg	.08	586.0	.206	.000	.000	.000	24.5	406.0	......	......
19	Deep well, Lake Winnipeg	0.0	1070.0	.034	.000	.001	1.600	234.2	550.0	......	......
20	" " Texas	0.0	566.0	.020	.194	.000	.000	101.0	22.0	......	......
21	Cistern, Jamaica	.33	......	.040	.012	.000	.100	1.4	5.4	......	......

Table V.

SEWAGE AND POLLUTED WATERS FROM VARIOUS PARTS OF NORTH AMERICA.

(Parts per Million.)

No.		Color.	Total Residue.	Ammonia.		Nitrogen as		Chlorine.	Hardness.	Ox. Cons.
				Albuminoid.	Free.	Nitrites.	Nitrates.			
1	Illinois and Michigan Canal, Lockport, Ill. (Streams Examination, Chicago, 1903.)	.....	630.00	3.600	16.000	.000	.100	93.9	......	......
2	Desplaines River, South Joliet. (Streams Examination, Chicago, 1903.)	0.15	282.	.960	3.000	.072	.050	30.5	......	9.9
3	Illinois River at Morris. (Chem. Survey of Waters of Illinois, 1897–1902.)	.....	679.02	2.400	9.200	.060	.350	92.0	......	29.5
4	Illlnois River at Beardstown. (Streams Examination, Chicago, 1903.)	0.23	392.0	.408	2.800	.046	2.000	28.0	......	6.8
5	Mississippi River, New Orleans. (Report on Water and Sewerage, New Orleans, 1903.)	.....	580.0	.290	.013	.023	.560	7.5	......	8.8
6	Ohio River. (Investigations into the Purification of the Ohio River for City of Cincinnati, 1899.)	0.08	1057.0	.746	.018	.004	1.020	6.0	......	14.3
7	Inlet to Easton's Pond. (Board of Health, Newport, R. I.)	1.000	121.0	.790	.520	.066	.500	12.2	25.0	10.8
8	Port Townsend, Glendale Dairy. (Washington Geol. Survey, Vol. I, Part V.)	Clear	239.0	.187	.200	.000	6.940	46.7	146.4	......
9	Parral. From Carafe on Table. (Potable Waters of Mexico. Trans. Amer Inst Mining Engineers, Nov. 1901.)	0.00	566.0	.080	.000	.040	15.000	89.7	224.0	......
10	Well-McConway-Torley Mfg. Co., Pittsburg. (Filtration Commission, Pittsburg, 1899.)	1.50	320.0	.124	.018	.000	1.500	30.1	160.0	......
11	Well, Sligo Mills, Pittsburg. (Filtration Commission, Pittsburg, 1899.)	.....	306.0	.110	.230	.040	.000	18.4	144.9	......

TABLE V—*Continued.*

SEWAGE AND POLLUTED WATERS.

(Parts per Million.)

No.		Color.	Total Residue.	Ammonia.		Nitrogen as		Chlorine.	Hardness	Ox. Cons.
				Albuminoid.	Free.	Nitrites.	Nitrates.			
1	Sewage, Manufacturing city	....	663.0	7.60	55.00	.000	.000	93.5	....	71.00
2	" small town	....	480.0	4.60	16.40	.160	1.220	55.8	....	56.00
3	" dilute	....	290.0	2.960	6.400	.640	.020	37.2	....	27.80
4	Brook, Massachusetts	....	....	.154	.034	.030	2.750	15.6	50.0	....
5	River, Massachusetts	....	73.9	.214	.873	.002	....	5.2	....	....
6	Brook, below filter-beds	.25	221.7	.262	3.547	.209	3.127	46.7	53.0	4.30
7	Well, coast Mass., May	0.0	....	.044	.056	.001	1.750	44.0	32.0	....
8	" " " July	0.0	....	.040	.394	.150	10.00	54.0	35.0	....
9	Well, Newport, R. I	0.0	150.0	.004	.004	.000	3.900	26.0	57.0	.000
10	" Essex, Mass	.02	583.0	.100	.032	.005	3.500	110.0	194.4	....
11	" Framingham, Mass	0.0	691.0	.080	.930	.010	50.00	72.2	172.2	....
12	" Roxbury, Mass	.16	972 0	.104	.068	.027	46.00	108.6	225.2	4.130

TABLE VI.

MINERAL CONTENTS OF SOME NATURAL WATERS.

(Parts per Million.)

No.	Locality.	Total Solids	Na_2O	CaO	MgO	Fe_2O_3	SiO_2	CO_2	Cl	SO_3	Remarks.
	MASSACHUSETTS SAMPLES—WELLS.										
1	Mansfield	27.3	....	3.06	.954	.014	8 9	......	2.6	1.31	Normal ground-water.
2	Framingham	72.3	......	13.41	3.32	0.0	9.9	......	21.3	4.24	Near sewage field.
3	Hyde Park	89.50	....	10.40	2.61	.705	8.33	......	11.4	3.88	Potassium and lithium present. Imperf. nat. filtration.
4	Marblehead	549.4	.. ..	85.10	38.60	.107	16.60	......	145.3	29.80	Near the sea.
	WATERS OF THE ALKALI BELT.										
5	Hunter Well, S. D	2056.5	942.0	11.0	445.0	12.8	17.6	147.5	465.3	525.6	Used four years without harm.
6	Redstone Well, S. D	2014.4	297.7	387.8	155.4	3.0	12.4	63.6	115.8	1006.8	Used with marked success in irrigation.
7	Amsden, S. D	789.6	21.4	206.4	90.6	11.0	46.8	112.8	2.2	295.6	Does not foam in boilers.
8	Sanborn Co., S. D	1714.0	231.8	382.8	89.6	24.6	50.0	82.7	68.1	797.4	Stock relish this water.

Table VII.

TABLE OF HARDNESS, SHOWING THE PARTS OF CALCIUM CARBONATE ($CaCO_3$) IN 1,000,000 FOR EACH TENTH OF A CUBIC CENTIMETER OF SOAP SOLUTION USED.

	0.0 cu. cm.	0.1 cu. cm.	0.2 cu. cm.	0.3 cu. cm.	0.4 cu. cm.	0.5 cu. cm.	0.6 cu. cm.	0.7 cu. cm.	0.8 cu. cm.	0.9 cu. cm.
0.0								0.0	1.6	3.2
1.0	4.8	6.3	7.9	9.5	11.1	12.7	14.3	15.6	16.9	18.2
2.0	19.5	20.8	22.1	23.4	24.7	26.0	27.3	28.6	29.9	31.2
3.0	32.5	33.8	35.1	36.4	37.7	39.0	40.3	41.6	42.9	44.3
4.0	45.7	47.1	48.6	50.0	51.4	52.9	54.3	55.7	57.1	58.6
5.0	60.0	61.4	62.9	64.3	65.7	67.1	68.6	70.0	71.4	72.9
6.0	74.3	75.7	77.1	78.6	80.0	81.4	82.9	84.3	85.7	87.1
7.0	88.6	90.0	91.4	92.9	94.3	95.7	97.1	98.6	100.0	101.5
8.0	103.0	104.5	106.0	107.5	109.0	110.5	112.0	113.5	115.0	116.5
9.0	118.0	119.5	121.1	122.6	124.1	125.6	127.1	128.6	130.1	131.6
10.0	133.1	134.6	136.1	137.6	139.1	140.6	142.1	143.7	145.2	146.8
11.0	148.4	150.0	151.6	153.2	154.8	156.3	157.9	159.5	161.1	162.7
12.0	164.3	165.9	167.5	169.0	170.6	172.2	173.8	175.4	177.0	178.6
13.0	180.2	181.7	183.3	184.9	186.5	188.1	189.7	191.3	192.9	194.4
14.0	196.0	197.6	199.2	200.8	202.4	204.0	205.6	207.1	208.7	210.3
15.0	211.9	213.5	215.1	216.8	218.5	220.2	221.8	223.5	225.2	226.9

Table VIII.

SHOWING THE NUMBER OF CUBIC CENTIMETERS OF OXYGEN DISSOLVED IN 1000 CUBIC CENTIMETERS OF WATER WHEN SATURATED AT DIFFERENT TEMPERATURES, AS CALCULATED BY WINKLER.*

Deg. Cent.	Cu. Cm.	Deg. Cent.	Cu. Cm.	Deg. Cent.	Cu. Cm.
0	10.187	11	7.692	21	6.233
1	9.910	12	7.518	22	6.114
2	9.643	13	7.352	23	5.999
3	9.387	14	7.192	24	5.886
4	9.142	15	7.038	25	5.776
5	8.907	16	6.891	26	5.669
6	8.682	17	6.750	27	5.564
7	8.467	18	6.614	28	5.460
8	8.260	19	6.482	29	5.357
9	8.063	20	6.356	30	5.255
10	7.873				

* *Berichte*, **22** (*1889*), 1772.

TABLE IX.

FOR CORRECTING THE SPECIFIC GRAVITY OF MILK ACCORDING TO TEMPERATURE. ADAPTED FROM THE TABLE OF VIETH.

(Temperature in Degrees Centigrade.)

Specific Gravity.	10°	11°	12°	13°	14°	15°	16°	17°	18°	19°	20°
1.025	24.1	24.3	24.5	24.6	24.7	24.9	25.1	25.3	25.4	25.6	25.9
26	25.1	25.2	25.4	25.5	25.7	25.9	26.1	26.3	26.5	26.7	27.0
27	26.1	26.2	26.4	26.5	26.7	26.9	27.1	27.4	27.5	27.7	28.0
28	27.0	27.2	27.4	27.5	27.7	27.9	28.1	28.4	28.5	28.7	29.0
29	28.0	28.2	28.4	28.5	28.7	28.9	29.1	29.4	29.5	29.8	30.1
30	29.0	29.1	29.3	29.5	29.7	29.9	30.1	30.4	30.5	30.8	31.1
31	29.9	30.1	30.3	30.4	30.6	30.9	31.2	31.4	31.5	31.8	32.2
32	30.9	31.1	31.3	31.4	31.6	31.9	32.2	32.4	32.6	32.9	33.2
33	31.8	32.0	32.3	32.4	32.6	32.9	33.2	33.4	33.6	33.9	34.2
34	32.7	33.0	33.2	33.4	33.6	33.9	34.2	34.4	34.6	34.9	35.2
35	33.6	33.9	34.1	34.4	34.6	34.9	35.2	35.4	35.6	35.9	36.2

Directions.—Find the observed gravity in the left-hand column. Then in the same line, and under the observed temperature, will be found the corrected reading.

Table X.

PERCENTAGE OF ALCOHOL BY WEIGHT FROM THE SPECIFIC GRAVITY AT 15°.5 C. (HEHNER.)

Sp. Gr. 15°.5 C.	Per cent. Alcohol by Weight.	Sp. Gr. 15°.5 C.	Per cent. Alcohol by Weight.	Sp. Gr. 15°.5 C.	Per cent. Alcohol by Weight	Sp. Gr. 15°.5 C.	Per cent. Alcohol by Weight.
1.0000	0.00	7	2.44	4	5.00	1	7.87
0.9999	0.05	6	2.50	3	5.06	0	7.93
8	0.11	5	2.56	2	5.12	0.9869	8.00
7	0.16	4	2.61	1	5.19	8	8.07
6	0.21	3	2.67	0	5.25	7	8.14
5	0.26	2	2.72	0.9909	5.31	6	8.21
4	0.32	1	2.78	8	5.37	5	8.29
3	0.37	0	2.83	7	5.44	4	8.36
2	0.42	0.9949	2.89	6	5.50	3	8.43
1	0.47	8	2.94	5	5.56	2	8.50
0	0.53	7	3.00	4	5.62	1	8.57
0.9989	0.58	6	3.06	3	5.69	0	8.64
8	0.63	5	3.12	2	5.75	0.9859	8.71
7	0.68	4	3.18	1	5.81	8	8.79
6	0.74	3	3.24	0	5.87	7	8.86
5	0.79	2	3.29	0.9899	5.94	6	8.93
4	0.84	1	3.35	8	6.00	5	9.00
3	0.89	0	3.41	7	6.07	4	9.07
2	0.95	0.9939	3.47	6	6.14	3	9.14
1	1.00	8	3.53	5	6.21	2	9.21
0	1.06	7	3.59	4	6.28	1	9.29
0.9979	1.12	6	3.65	3	6.36	0	9.36
8	1.19	5	3.71	2	6.43	0.9849	9.43
7	1.25	4	3.76	1	6.50	8	9.50
6	1.31	3	3.82	0	6.57	7	9.57
5	1.37	2	3.88	0.9889	6.64	6	9.64
4	1.44	1	3.94	8	6.71	5	9.71
3	1.50	0	4.00	7	6.78	4	9.79
2	1.56	0.9929	4.06	6	6.86	3	9.86
1	1.62	8	4.12	5	6.93	2	9.93
0	1.69	7	4.19	4	7.00	1	10.00
0.9969	1.75	6	4.25	3	7.07	0	10.08
8	1.81	5	4.31	2	7.13	0.9839	10.15
7	1.87	4	4.37	1	7.20	8	10.23
6	1.94	3	4.44	0	7.27	7	10.31
5	2.00	2	4.50	0.9879	7.33	6	10.38
4	2.06	1	4.56	8	7.40	5	10.46
3	2.11	0	4.62	7	7.47	4	10.54
2	2.17	0.9919	4.69	6	7.53	3	10.62
1	2.22	8	4.75	5	7.60	2	10.69
0	2.28	7	4.81	4	7.67	1	10.77
0.9959	2.33	6	4.87	3	7.73	0	10.85
8	2.39	5	4.94	2	7.80	0.9829	10.92

TABLE X.—*Continued.*

PERCENTAGE OF ALCOHOL BY WEIGHT.

Sp. Gr. 15°.5 C.	Per cent. Alcohol by Weight.	Sp. Gr. 15°.5 C.	Per cent. Alcohol by Weight.	Sp. Gr. 15°.5 C.	Per cent. Alcohol by Weight.	Sp. Gr. 15°.5 C.	Per cent. Alcohol by Weight.
0.9829	**10.92**	4	14.45	**0.9739**	**18.15**	4	21.77
8	11.00	3	14.55	8	18.23	3	21.85
7	11.08	2	14.64	7	18.31	2	21.92
6	11.15	1	14.73	6	18.38	1	22.00
5	11.23	0	14.82	5	18.46	0	22.08
4	11.31	**0.9779**	**14.90**	4	18.54	**0.9689**	**22.15**
3	11.38	8	15.00	3	18.62	8	22.23
2	11.46	7	15.08	2	18.69	7	22.31
1	11.54	6	15.17	1	18.77	6	22.38
0	11.62	5	15.25	0	18.85	5	22.46
0.9819	**11.69**	4	15.33	**0.9729**	**18.92**	4	22.54
8	11.77	3	15.42	8	19.00	3	22.62
7	11.85	2	15.50	7	19.08	2	22.69
6	11.92	1	15.58	6	19.17	1	22.77
5	12.00	0	15.67	5	19.25	0	22.85
4	12.08	**0.9769**	**15.75**	4	19.33	**0.9679**	**22.92**
3	12.15	8	15.83	3	19.42	8	23.00
2	12.23	7	15.92	2	19.50	7	23.08
1	12.31	6	16.00	1	19.58	6	23.15
0	12.38	5	16.08	0	19.67	5	23.23
0.9809	**12.46**	4	16.15	**0.9719**	**19.75**	4	23.31
8	12.54	3	16.23	8	19.83	3	23.38
7	12.62	2	16.31	7	19.92	2	23.46
6	12.69	1	16.38	6	20.00	1	23.54
5	12.77	0	16.46	5	20.08	0	23.62
4	12.85	**0.9759**	**16.54**	4	20.17	**0.9669**	**23.69**
3	12.92	8	16.62	3	20.25	8	23.77
2	13.00	7	16.69	2	20.33	7	23.85
1	13.08	6	16.77	1	20.42	6	23.92
0	13.15	5	16.85	0	20.50	5	24.00
0.9799	**13.23**	4	16.92	**0.9709**	**20.58**	4	24.08
8	13.31	3	17.00	8	20.67	3	24.15
7	13.38	2	17.08	7	20.75	2	24.23
6	13.46	1	17.17	6	20.83	1	24.31
5	13.54	0	17.25	5	20.92	0	24.38
4	13.62	**0.9749**	**17.33**	4	21.00	**0.9659**	**24.46**
3	13.69	8	17.42	3	21.08	8	24.54
2	13.77	7	17.50	2	21.15	7	24.62
1	13.85	6	17.58	1	21.23	6	24.69
0	13.92	5	17.67	0	21.31	5	24.77
0.9789	**14.00**	4	17.75	**0.9699**	**21.38**	4	24.85
8	14.09	3	17.83	8	21.46	3	24.92
7	14.18	2	17.92	7	21.54	2	25.00
6	14.27	1	18.00	6	21.62		
5	14.36	0	18.08	5	21.69		

Table XI.

EXTRACT IN BEER-WORT.

(According to Schultz and Ostermann.)

Specific Gravity at 15° C.	Extract. Per cent. by Weight.	Specific Gravity at 15° C.	Extract. Per cent. by Weight.	Specific Gravity at 15° C.	Extract. Per cent. by Weight.	Specific Gravity at 15° C.	Extract. Per cent. by Weight.
1.0000	0.00	1.0235	6.07	1.0470	11.89	1.0705	17.59
1.0005	0.13	1.0240	6.19	1.0475	12.01	1.0710	17.70
1.0010	0.26	1.0245	6.31	1.0480	12.14	1.0715	17.81
1.0015	0.39	1.0250	6.44	1.0485	12.26	1.0720	17.93
1.0020	0.52	1.0255	6.58	1.0490	12.38	1.0725	18.04
1.0025	0.66	1.0260	6.71	1.0495	12.50	1.0730	18.15
1.0030	0.79	1.0265	6.85	1.0500	12.63	1.0735	18.26
1.0035	0.92	1.0270	6.99	1.0505	12.75	1.0740	18.38
1.0040	1.05	1.0275	7.12	1.0510	12.87	1.0745	18.49
1.0045	1.18	1.0280	7.26	1.0515	12.99	1.0750	18.59
1.0050	1.31	1.0285	7.37	1.0520	13.12	1.0755	18.70
1.0055	1.44	1.0290	7.48	1.0525	13.24	1.0760	18.81
1.0060	1.56	1.0395	7.60	1.0530	13.36	1.0765	18.91
1.0065	1.69	1.0300	7.71	1.0535	13.48	1.0770	19.02
1.0070	1.82	1.0305	7.82	1.0540	13.61	1.0775	19.12
1.0075	1.95	1.0310	7.93	1.0545	13.73	1.0780	19.23
1.0080	2.07	1.0315	8.04	1.0550	13.86	1.0785	19.33
1.0085	2.20	1.0320	8.16	1.0555	13.98	1.0790	19.44
1.0090	2.33	1.0325	8.27	1.0560	14.11	1.0795	19.56
1.0095	2.46	1.0330	8.40	1.0565	14.23	1.0800	19.67
1.0100	2.58	1.0335	8.53	1.0570	14.36	1.0805	19.79
1.0105	2.71	1.0340	8.67	1.0575	14.49	1.0810	19.91
1.0110	2.84	1.0345	8.80	1.0580	14.62	1.0815	20.03
1.0115	2.97	1.0350	8.94	1.0585	14.75	1.0820	20.14
1.0120	3.10	1.0355	9.07	1.0590	14.89	1.0825	20.26
1.0125	3.23	1.0360	9.21	1.0595	15.02	1.0830	20.37
1.0130	3.35	1.0365	9.34	1.0600	15.14	1.0835	20.48
1.0135	3.48	1.0370	9.45	1.0605	15.25	1.0840	20.59
1.0140	3.61	1.0375	9.57	1.0610	15.36	1.0845	20.70
1.0145	3.74	1.0380	9.69	1.0615	15.47	1.0850	20.81
1.0150	3.87	1.0385	9.81	1.0620	15.58	1.0855	20.93
1.0155	4.00	1.0390	9.92	1.0625	15.69	1.0860	21.06
1.0160	4.13	1.0395	10.04	1.0630	15.80	1.0865	21.19
1.0165	4.26	1.0400	10.16	1.0635	15.92	1.0870	21.33
1.0170	4.39	1.0405	10.27	1.0640	16.03	1.0875	21.43
1.0175	4.53	1.0410	10.40	1.0645	16.14	1.0880	21.54
1.0180	4.66	1.0415	10.52	1.0650	16.25	1.0885	21.64
1.0185	4.79	1.0420	10.65	1.0655	16.37	1.0890	21.75
1.0190	4.93	1.0425	10.77	1.0660	16.50	1.0895	21.86
1.0195	5.06	1.0430	10.90	1.0665	16.62	1.0900	21.98
1.0200	5.20	1.0435	11.03	1.0670	16.74	1.0905	22.08
1.0205	5.33	1.0440	11.15	1.0675	16.86	1.0910	22.19
1.0210	5.45	1.0445	11.28	1.0680	16.99	1.0915	22.30
1.0215	5.57	1.0450	11.40	1.0685	17.11	1.0920	22.41
1.0220	5.70	1.0455	11.53	1.0690	17.23	1.0925	22.52
1.0225	5.82	1.0460	11.65	1.0695	17.35	1.0930	22.63
1.0230	5.94	1.0465	11.77	1.0700	17.48	1.0935	22.73

TABLE XI.—*Continued.*

EXTRACT IN BEER-WORT.

(According to Schultz and Ostermann.)

Specific Gravity at 15° C.	Extract. Per cent. by Weight.	Specific Gravity at 15° C.	Extract. Per cent by Weight.	Specific Gravity at 15° C.	Extract. Per cent. by Weight	Specific Gravity at 15° C.	Extract. Per cent. by Weight.
1.0940	22.84	1.1020	24.53	1.1100	26.27	1.1180	27.88
1.0945	22.94	1.1025	24.64	1.1105	26.37	1.1185	27.98
1.0950	23.05	1.1030	24.74	1.1110	26.48	1.1190	28.09
1.0955	23.16	1.1035	24.85	1.1115	26.58	1.1195	28.19
1.0960	23.27	1.1040	24.96	1.1120	26.68	1.1200	28.28
1.0965	23.37	1.1045	25.07	1.1125	26.79	1.1205	28.38
1.0970	23.48	1.1050	25.18	1.1130	26.89	1.1210	28.48
1.0975	23.59	1.1055	25.29	1.1135	26.99	1.1215	28.58
1.0980	23.69	1.1060	25.40	1.1140	27.09	1.1220	28.68
1.0985	23.80	1.1065	25.50	1.1145	27.19	1.1225	28.78
1.0990	23.90	1.1070	25.61	1.1150	27.29	1.1230	28.88
1.0995	24.01	1.1075	25.71	1.1155	27.38	1.1235	28.98
1.1000	24.11	1.1080	25.82	1.1160	27.48	1.1240	29.08
1.1005	24.21	1.1085	25.93	1.1165	27.58	1.1245	29.18
1.1010	24.32	1.1090	26.05	1.1170	27.68	1.1250	29.28
1.1015	24.43	1.1095	26.16	1.1175	27.78	1.1255	29.38

LOGARITHMS OF NUMBERS.

Natural Numbers.	0	1	2	3	4	5	6	7	8	9	Prop. Parts 1	2	3	4	5	6	7	8	9
10	0000	0043	0086	0128	0170	0212	0253	0294	0334	0374	4	8	12	17	21	25	29	33	37
11	0414	0453	0492	0531	0569	0607	0645	0682	0719	0755	4	8	11	15	19	23	26	30	34
12	0792	0828	0864	0899	0934	0969	1004	1038	1072	1106	3	7	10	14	1	21	24	28	31
13	1139	1173	1206	1239	1271	1303	1335	1367	1399	1430	3	6	10	13	16	19	23	26	29
14	1461	1492	1523	1553	1584	1614	1644	1673	1703	1732	3	6	9	12	15	18	21	24	27
15	1761	1790	1818	1847	1875	1903	1931	1959	1987	2014	3	6	8	11	14	17	20	22	25
16	2041	2068	2095	2122	2148	2175	2201	2227	2253	2279	3	5	8	11	13	16	18	21	24
17	2304	2330	2355	2380	2405	2430	2455	2480	2504	2529	2	5	7	10	12	15	17	20	22
18	2553	2577	2601	2625	2648	2672	2695	2718	2742	2765	2	5	7	9	12	14	16	19	21
19	2788	2810	2833	2856	2878	2900	2923	2945	2967	2989	2	4	7	9	11	13	16	18	20
20	3010	3032	3054	3075	3096	3118	3139	3160	3181	3201	2	4	6	8	11	13	15	17	19
21	3222	3243	3263	3284	3304	3324	3345	3365	3385	3404	2	4	6	8	10	12	14	16	18
22	3424	3444	3464	3483	3502	3522	3541	3560	3579	3598	2	4	6	8	10	12	14	15	17
23	3617	3636	3655	3674	3692	3711	3729	3747	3766	3784	2	4	6	7	9	11	13	15	17
24	3802	3820	3838	3856	3874	3892	3909	3927	3945	3962	2	4	5	7	9	11	12	14	16
25	3979	3997	4014	4031	4048	4065	4082	4099	4116	4133	2	3	5	7	9	10	12	14	15
26	4150	4166	4183	4200	4216	4232	4249	4265	4281	4298	2	3	5	7	8	10	11	13	15
27	4314	4330	4346	4362	4378	4393	4409	4425	4440	4456	2	3	5	6	8	9	11	13	14
28	4472	4487	4502	4518	4533	4548	4564	4579	4594	4609	2	3	5	6	8	9	11	12	14
29	4624	4639	4654	4669	4683	4698	4713	4728	4742	4757	1	3	4	6	7	9	10	12	13
30	4771	4786	4800	4814	4829	4843	4857	4871	4886	4900	1	3	4	6	7	9	10	11	13
31	4914	4928	4942	4955	4969	4983	4997	5011	5024	5038	1	3	4	6	7	8	10	11	12
32	5051	5065	5079	5092	5105	5119	5132	5145	5159	5172	1	3	4	5	7	8	9	11	12
33	5185	5198	5211	5224	5237	5250	5263	5276	5289	5302	1	3	4	5	6	8	9	10	12
34	5315	5328	5340	5353	5366	5378	5391	5403	5416	5428	1	3	4	5	6	8	9	10	11
35	5441	5453	5465	5478	5490	5502	5514	5527	5539	5551	1	2	4	5	6	7	9	10	11
36	5563	5575	5587	5599	5611	5623	5635	5647	5658	5670	1	2	4	5	6	7	8	10	11
37	5682	5694	5705	5717	5729	5740	5752	5763	5775	5786	1	2	3	5	6	7	8	9	10
38	5798	5809	5821	5832	5843	5855	5866	5877	5888	5899	1	2	3	5	6	7	8	9	10
39	5911	5922	5933	5944	5955	5966	5977	5988	5999	6010	1	2	3	4	5	7	8	9	10
40	6021	6031	6042	6053	6064	6075	6085	6096	6107	6117	1	2	3	4	5	6	8	9	10
41	6128	6138	6149	6160	6170	6180	6191	6201	6212	6222	1	2	3	4	5	6	7	8	9
42	6232	6243	6253	6263	6274	6284	6294	6304	6314	6325	1	2	3	4	5	6	7	8	9
43	6335	6345	6355	6365	6375	6385	6395	6405	6415	6425	1	2	3	4	5	6	7	8	9
44	6435	6444	6454	6464	6474	6484	6493	6503	6513	6522	1	2	3	4	5	6	7	8	9
45	6532	6542	6551	6561	6571	6580	6590	6599	6609	6618	1	2	3	4	5	6	7	8	9
46	6628	6637	6646	6656	6665	6675	6684	6693	6702	6712	1	2	3	4	5	6	7	7	8
47	6721	6730	6739	6749	6758	6767	6776	6785	6794	6803	1	2	3	4	5	5	6	7	8
48	6812	6821	6830	6839	6848	6857	6866	6875	6884	6893	1	2	3	4	4	5	6	7	8
49	6902	6911	6920	6928	6937	6946	6955	6964	6972	6981	1	2	3	4	4	5	6	7	8
50	6990	6998	7007	7016	7024	7033	7042	7050	7059	7067	1	2	3	3	4	5	6	7	8
51	7076	7084	7093	7101	7110	7118	7126	7135	7143	7152	1	2	3	3	4	5	6	7	8
52	7160	7168	7177	7185	7193	7202	7210	7218	7226	7235	1	2	2	3	4	5	6	7	7
53	7243	7251	7259	7267	7275	7284	7292	7300	7308	7316	1	2	2	3	4	5	6	6	7
54	7324	7332	7340	7348	7356	7364	7372	7380	7388	7396	1	2	2	3	4	5	6	6	7

LOGARITHMS OF NUMBERS.

Natural Numbers.	0	1	2	3	4	5	6	7	8	9	Proportional Parts. 1	2	3	4	5	6	7	8	9
55	7404	7412	7419	7427	7435	7443	7451	7459	7466	7474	1	2	2	3	4	5	5	6	7
56	7482	7490	7497	7505	7513	7520	7528	7536	7543	7551	1	2	2	3	4	5	5	6	7
57	7559	7566	7574	7582	7589	7597	7604	7612	7619	7627	1	2		3	4	5		6	7
58	7634	7642	7649	7657	7664	7672	7679	7686	7694	7701	1	1	2	3	4	4	5		7
59	7709	7716	7723	7731	7738	7745	7752	7760	7767	7774	1	1	2	3	4	4	5	6	7
60	7782	7789	7796	7803	7810	7818	7825	7832	7839	7846		1	2	3	4	4	5	6	6
61	7853	7860	7868	7875	7882	7889	7896	7903	7910	7917	1	1	2		4	4	5	6	6
62	7924	7931	7938	7945	7952	7959	7966	7973	7980	7987	1	1	2	3	3	4	5	6	6
63	7993	8000	8007	8014	8021	8028	8035	8041	8048	8055	1	1	2	3	3	4	5	5	6
64	8062	8069	8075	8082	8089	8096	8102	8109	8116	8122	1	1	2	3	3	4	5	5	6
65	8129	8136	8142	8149	8156	8162	8169	8176	8182	8189	1	1	2	3	3	4	5	5	6
66	8195	8202	8209	8215	8222	8228	8235	8241	8248	8254	1	1	2	3	3	4	5	5	6
67	8261	8267	8274	8280	8287	8293	8299	8306	8312	8319	1	1	2	3	3	4	5	5	6
68	8325	8331	8338	8344	8351	8357	8363	8370	8376	8382	1	1	2	3	3	4	4	5	6
69	8388	8395	8401	8407	8414	8420	8426	8432	8439	8445	1	1	2	2	3	4	4	5	6
70	8451	8457	8463	8470	8476	8482	8488	8494	8500	8506	1	1	2	2	3	4	4	5	6
71	8513	8519	8525	8531	8537	8543	8549	8555	8561	8567	1	1	2	2	3	4	4	5	5
72	8573	8579	8585	8591	8597	8603	8609	8615	8621	8627	1	1	2	2	3	4	4	5	5
73	8633	8639	8645	8651	8657	8663	8669	8675	8681	8686	1	1	2	2	3	4	4	5	5
74	8692	8698	8704	8710	8716	8722	8727	8733	8739	8745	1	1	2	2	3	4	4	5	5
75	8751	8756	8762	8768	8774	8779	8785	8791	8797	8802	1	1	2	2	3	3	4	5	5
76	8808	8814	8820	8825	8831	8837	8842	8848	8854	8859	1	1	2	2	3	3	4	5	5
77	8865	8871	8876	8882	8887	8893	8899	8904	8910	8915	1	1	2	2	3	3	4	4	5
78	8921	8927	8932	8938	8943	8949	8954	8960	8965	8971	1	1	2	2	3	3	4	4	5
79	8976	8982	8987	8993	8998	9004	9009	9015	9020	9026	1	1	2	2	3	3	4	4	5
80	9031	9036	9042	9047	9053	9058	9063	9069	9074	9079	1	1	2	2	3	3	4	4	5
81	9085	9090	9096	9101	9106	9112	9117	9122	9128	9133	1	1	2	2	3	3	4	4	5
82	9138	9143	9149	9154	9159	9165	9170	9175	9180	9186	1	1	2	2	3	3	4	4	5
83	9191	9196	9201	9206	9212	9217	9222	9227	9232	9238	1	1	2	2	3	3	4	4	5
84	9243	9248	9253	9258	9263	9269	9274	9279	9284	9289	1	1	2	2	3	3	4	4	5
85	9294	9299	9304	9309	9315	9320	9325	9330	9335	9340	1	1	2	2	3	3	4	4	5
86	9345	9350	9355	9360	9365	9370	9375	9380	9385	9390	1	1	2	2	3	3	4	4	5
87	9395	9400	9405	9410	9415	9420	9425	9430	9435	9440	0	1	1	2	2	3	3	4	4
88	9445	9450	9455	9460	9465	9469	9474	9479	9484	9489	0	1	1	2	2	3	3	4	4
89	9494	9499	9504	9509	9513	9518	9523	9528	9533	9538	0	1	1	2	2	3	3	4	4
90	9542	9547	9552	9557	9562	9566	9571	9576	9581	9586	0	1	1	2	2	3	3	4	4
91	9590	9595	9600	9605	9609	9614	9619	9624	9628	9633	0	1	1	2	2	3	3	4	4
92	9638	9643	9647	9652	9657	9661	9666	9671	9675	9680	0	1	1	2	2	3	3	4	4
93	9685	9689	9694	9699	9703	9708	9713	9717	9722	9727	0	1	1	2	2	3	3	4	4
94	9731	9736	9741	9745	9750	9754	9759	9763	9768	9773	0	1	1	2	2	3	3	4	4
95	9777	9782	9786	9791	9795	9800	9805	9809	9814	9818	0	1	1	2	2	3	3	4	4
96	9823	9827	9832	9836	9841	9845	9850	9854	9859	9863	0	1	1	2	2	3	3	4	4
97	9868	9872	9877	9881	9886	9890	9894	9899	9903	9908	0	1	1	2	2	3	3	4	4
98	9912	9917	9921	9926	9930	9934	9939	9943	9948	9952	0	1	1	2	2	3	3	4	4
99	9956	9961	9965	9969	9974	9978	9983	9987	9991	9996	0	1	1	2	2	3	3	3	4

ANTILOGARITHMS.

Logarithms.	0	1	2	3	4	5	6	7	8	9	Proportional Parts								
											1	2	3	4	5	6	7	8	9
.00	1000	1002	1005	1007	1009	1012	1014	1016	1019	1021	0	0	1	1	1	1	2	2	2
.01	1023	1026	1028	1030	1033	1035	1038	1040	1042	1045	0	0	1	1	1	1	2	2	2
.02	1047	1050	1052	1054	1057	1059	1062	1064	1067	1069	0	0	1	1	1	1	2	2	2
.03	1072	1074	1076	1079	1081	1084	1086	1089	1091	1094	0	0	1	1	1	1	2	2	2
.04	1096	1099	1102	1104	1107	1109	1112	1114	1117	1119	0	1	1	1	1	2	2	2	2
.05	1122	1125	1127	1130	1132	1135	1138	1140	1143	1146	0	1	1	1	1	2	2	2	2
.06	1148	1151	1153	1156	1159	1161	1164	1167	1169	1172	0	1	1	1	1	2	2	2	2
.07	1175	1178	1180	1183	1186	1189	1191	1194	1197	1199	0	1	1	1	1	2	2	2	2
.08	1202	1205	1208	1211	1213	1216	1219	1222	1225	1227	0	1	1	1	1	2	2	2	3
.09	1230	1233	1236	1239	1242	1245	1247	1250	1253	1256	0	1	1	1	1	2	2	2	3
.10	1259	1262	1265	1268	1271	1274	1276	1279	1282	1285	0	1	1	1	1	2	2	2	3
.11	1288	1291	1294	1297	1300	1303	1306	1309	1312	1315	0	1	1	1	2	2	2	2	3
.12	1318	1321	1324	1327	1330	1334	1337	1340	1343	1346	0	1	1	1	2	2	2	2	3
.13	1349	1352	1355	1358	1361	1365	1368	1371	1374	1377	0	1	1	1	2	2	2	3	3
.14	1380	1384	1387	1390	1393	1396	1400	1403	1406	1409	0	1	1	1	2	2	2	3	3
.15	1413	1416	1419	1422	1426	1429	1432	1435	1439	1442	0	1	1	1	2	2	2	3	3
.16	1445	1449	1452	1455	1459	1462	1466	1469	1472	1476	0	1	1	1	2	2	2	3	3
.17	1479	1483	1486	1489	1493	1496	1500	1503	1507	1510	0	1	1	1	2	2	2	3	3
.18	1514	1517	1521	1524	1528	1531	1535	1538	1542	1545	0	1	1	1	2	2	2	3	3
.19	1549	1552	1556	1560	1563	1567	1570	1574	1578	1581	0	1	1	1	2	2	3	3	3
.20	1585	1589	1592	1596	1600	1603	1607	1611	1614	1618	0	1	1	1	2	2	3	3	3
.21	1622	1626	1629	1633	1637	1641	1644	1648	1652	1656	0	1	1	2	2	2	3	3	3
.22	1660	1663	1667	1671	1675	1679	1683	1687	1690	1694	0	1	1	2	2	2	3	3	3
.23	1698	1702	1706	1710	1714	1718	1722	1726	1730	1734	0	1	1	2	2	2	3	3	4
.24	1738	1742	1746	1750	1754	1758	1762	1766	1770	1774	0	1	1	2	2	2	3	3	4
.25	1778	1782	1786	1791	1795	1799	1803	1807	1811	1816	0	1	1	2	2	2	3	3	4
.26	1820	1824	1828	1832	1837	1841	1845	1849	1854	1858	0	1	1	2	2	3	3	3	4
.27	1862	1866	1871	1875	1879	1884	1888	1892	1897	1901	0	1	1	2	2	3	3	3	4
.28	1905	1910	1914	1919	1923	1928	1932	1936	1941	1945	0	1	1	2	2	3	3	4	4
.29	1950	1954	1959	1963	1968	1972	1977	1982	1986	1991	0	1	1	2	2	3	3	4	4
.30	1995	2000	2004	2009	2014	2018	2023	2028	2032	2037	0	1	1	2	2	3	3	4	4
.31	2042	2046	2051	2056	2061	2065	2070	2075	2080	2084	0	1	1	2	2	3	3	4	4
.32	2089	2094	2099	2104	2109	2113	2118	2123	2128	2133	0	1	1	2	2	3	3	4	4
.33	2138	2143	2148	2153	2158	2163	2168	2173	2178	2183	0	1	1	2	2	3	3	4	4
.34	2188	2193	2198	2203	2208	2213	2218	2223	2228	2234	1	1	2	2	3	3	4	4	5
.35	2239	2244	2249	2254	2259	2265	2270	2275	2280	2286	1	1	2	2	3	3	4	4	5
.36	2291	2296	2301	2307	2312	2317	2323	2328	2333	2339	1	1	2	2	3	3	4	4	5
.37	2344	2350	2355	2360	2366	2371	2377	2382	2388	2393	1	1	2	2	3	3	4	4	5
.38	2399	2404	2410	2415	2421	2427	2432	2438	2443	2449	1	1	2	2	3	3	4	4	5
.39	2455	2460	2466	2472	2477	2483	2489	2495	2500	2506	1	1	2	2	3	3	4	5	5
.40	2512	2518	2523	2529	2535	2541	2547	2553	2559	2564	1	1	2	2	3	4	4	5	5
.41	2570	2576	2582	2588	2594	2600	2606	2612	2618	2624	1	1	2	2	3	4	4	5	5
.42	2630	2636	2642	2649	2655	2661	2667	2673	2679	2685	1	1	2	2	3	4	4	5	6
.43	2692	2698	2704	2710	2716	2723	2729	2735	2742	2748	1	1	2	3	3	4	4	5	6
.44	2754	2761	2767	2773	2780	2786	2793	2799	2805	2812	1	1	2	3	3	4	4	5	6
.45	2818	2825	2831	2838	2844	2851	2858	2864	2871	2877	1	1	2	3	3	4	5	5	6
.46	2884	2891	2897	2904	2911	2917	2924	2931	2938	2944	1	1	2	3	3	4	5	5	6
.47	2951	2958	2965	2972	2979	2985	2992	2999	3006	3013	1	1	2	3	3	4	5	5	6
.48	3020	3027	3034	3041	3048	3055	3062	3069	3076	3083	1	1	2	3	4	4	5	6	6
.49	3090	3097	3105	3112	3119	3126	3133	3141	3148	3155	1	1	2	3	4	4	5	6	6

ANTILOGARITHMS.

Logarithms.	0	1	2	3	4	5	6	7	8	9	Proportional Parts. 1	2	3	4	5	6	7	8	9
.50	3162	3170	3177	3184	3192	3199	3206	3214	3221	3228	1	1	2	3	4	4	5	6	7
.51	3236	3243	3251	3258	3266	3273	3281	3289	3296	3304	1	2	2	3	4	5	5	6	7
.52	3311	3319	3327	3334	3342	3350	3357	3365	3373	3381	1	2	2	3	4	5	5	6	7
.53	3388	3396	3404	3412	3420	3428	3436	3443	3451	3459	1	2	2	3	4	5	6	6	7
.54	3467	3475	3483	3491	3499	3508	3516	3524	3532	3540	1	2	2	3	4	5	6	6	7
.55	3548	3556	3565	3573	3581	3589	3597	3606	3614	3622	1	2	2	3	4	5	6	7	7
.56	3631	3639	3648	3656	3664	3673	3681	3690	3698	3707	1	2	3	3	4	5	6	7	8
.57	3715	3724	3733	3741	3750	3758	3767	3776	3784	3793	1	2	3	3	4	5	6	7	8
.58	3802	3811	3819	3828	3837	3846	3855	3864	3873	3882	1	2	3	4	4	5	6	7	8
.59	3890	3899	3908	3917	3926	3936	3945	3954	3963	3972	1	2	3	4	5	5	6	7	8
.60	3981	3990	3999	4009	4018	4027	4036	4046	4055	4064	1	2	3	4	5	6	6	7	8
.61	4074	4083	4093	4102	4111	4121	4130	4140	4150	4159	1	2	3	4	5	6	7	8	9
.62	4169	4178	4188	4198	4207	4217	4227	4236	4246	4256	1	2	3	4	5	6	7	8	9
.63	4266	4276	4285	4295	4305	4315	4325	4335	4345	4355	1	2	3	4	5	6	7	8	9
.64	4365	4375	4385	4395	4406	4416	4426	4436	4446	4457	1	2	3	4	5	6	7	8	9
.65	4467	4477	4487	4498	4508	4519	4529	4539	4550	4560	1	2	3	4	5	6	7	8	9
.66	4571	4581	4592	4603	4613	4624	4634	4645	4656	4667	1	2	3	4	5	6	7	9	10
.67	4677	4688	4699	4710	4721	4732	4742	4753	4764	4775	1	2	3	4	5	7	8	9	10
.68	4786	4797	4808	4819	4831	4842	4853	4864	4875	4887	1	2	3	4	6	7	8	9	10
.69	4898	4909	4920	4932	4943	4955	4966	4977	4989	5000	1	2	3	5	6	7	8	9	10
.70	5012	5023	5035	5047	5058	5070	5082	5093	5105	5117	1	2	4	5	6	7	8	9	11
.71	5129	5140	5152	5164	5176	5188	5200	5212	5224	5236	1	2	4	5	6	7	8	10	11
.72	5248	5260	5272	5284	5297	5309	5321	5333	5346	5358	1	2	4	5	6	7	9	10	11
.73	5370	5383	5395	5408	5420	5433	5445	5458	5470	5483	1	3	4	5	6	8	9	10	11
.74	5495	5508	5521	5534	5546	5559	5572	5585	5598	5610	1	3	4	5	6	8	9	10	12
.75	5623	5636	5649	5662	5675	5689	5702	5715	5728	5741	1	3	4	5	7	8	9	10	12
.76	5754	5768	5781	5794	5808	5821	5834	5848	5861	5875	1	3	4	5	7	8	9	11	12
.77	5888	5902	5916	5929	5943	5957	5970	5984	5998	6012	1	3	4	5	7	8	10	11	12
.78	6026	6039	6053	6067	6081	6095	6109	6124	6138	6152	1	3	4	6	7	8	10	11	13
.79	6166	6180	6194	6209	6223	6237	6252	6266	6281	6295	1	3	4	6	7	9	10	11	13
.80	6310	6324	6339	6353	6368	6383	6397	6412	6427	6442	1	3	4	6	7	9	10	12	13
.81	6457	6471	6486	6501	6516	6531	6546	6561	6577	6592	2	3	5	6	8	9	11	12	14
.82	6607	6622	6637	6653	6668	6683	6699	6714	6730	6745	2	3	5	6	8	9	11	12	14
.83	6761	6776	6792	6808	6823	6839	6855	6871	6887	6902	2	3	5	6	8	9	11	13	14
.84	6918	6934	6950	6966	6982	6998	7015	7031	7047	7063	2	3	5	6	8	10	11	13	15
.85	7079	7096	7112	7129	7145	7161	7178	7194	7211	7228	2	3	5	7	8	10	12	13	15
.86	7244	7261	7278	7295	7311	7328	7345	7362	7379	7396	2	3	5	7	8	10	12	13	15
.87	7413	7430	7447	7464	7482	7499	7516	7534	7551	7568	2	3	5	7	9	10	12	14	16
.88	7586	7603	7621	7638	7656	7674	7691	7709	7727	7745	2	4	5	7	9	11	12	14	16
.89	7762	7780	7798	7816	7834	7852	7870	7889	7907	7925	2	4	5	7	9	11	13	14	16
.90	7943	7962	7980	7998	8017	8035	8054	8072	8091	8110	2	4	6	7	9	11	13	15	17
.91	8128	8147	8166	8185	8204	8222	8241	8260	8279	8299	2	4	6	8	9	11	13	15	17
.92	8318	8337	8356	8375	8395	8414	8433	8453	8472	8492	2	4	6	8	10	12	14	15	17
.93	8511	8531	8551	8570	8590	8610	8630	8650	8670	8690	2	4	6	8	10	12	14	16	18
.94	8710	8730	8750	8770	8790	8810	8831	8851	8872	8892	2	4	6	8	10	12	14	16	18
95	8913	8933	8954	8974	8995	9016	9036	9057	9078	9099	2	4	6	8	10	12	15	17	19
.96	9120	9141	9162	9183	9204	9226	9247	9268	9290	9311	2	4	6	8	11	13	15	17	19
.97	9333	9354	9376	9397	9419	9441	9462	9484	9506	9528	2	4	7	9	11	13	15	17	20
.98	9550	9572	9594	9616	9638	9661	9683	9705	9727	9750	2	4	7	9	11	13	16	18	20
.99	9772	9795	9817	9840	9863	9886	9908	9931	9954	9977	2	5	7	9	11	14	16	18	20

APPENDIX B.

REAGENTS.

AIR ANALYSIS.

Barium Hydroxide.—A solution containing about 4 grams of BaO and 0.2 gram of $BaCl_2$ to the liter. (1 c.c. = 1 mg. CO_2, approximately.)

Sulphuric Acid.—Dilute 45.45 c.c. of normal sulphuric acid to one liter. (1 c.c. = 1 mg. CO_2.) To standardize the solution measure 25 c.c. into a weighed platinum dish, add dilute ammonia-water in slight excess, evaporate to dryness on the water-bath, and dry at 120° C. to constant weight.

Standard Lime-water.—(For Popular Tests.)—Shake one part of freshly slaked lime with 20 parts of distilled water for twenty minutes and let the solution stand overnight or until perfectly clear. This solution should be very nearly equivalent to the above standard sulphuric acid. To a liter of distilled water add 5 c.c. of a solution of 0.7 gram of phenolphthalein in 100 c.c. of 50 per cent. alcohol and add lime-water drop by drop until a slight permanent pink color is produced. Add 12.6 c.c. of the above calcium hydroxide solution. The resulting solution is the standard lime-water used for the tests.

WATER ANALYSIS.

For Ammonia.—*Water Free from Ammonia.*—The ammonia-free water used in this laboratory is made by redistilling distilled water from a solution of alkaline permangan-

ate in a steam-heated copper still. The apparatus used is shown in Fig. 13. Only the middle portion of the distillate is collected. Oftentimes the distillate from a good spring-water may be used.

Nessler's Reagent.—Dissolve 61.750 grams KI in 250 c.c. distilled water and add a cold solution of $HgCl_2$ which has been saturated by boiling an excess of the salt and allowing it to crystallize out. Add the $HgCl_2$ cautiously until a slight permanent red precipitate (HgI_2) appears. Dissolve this

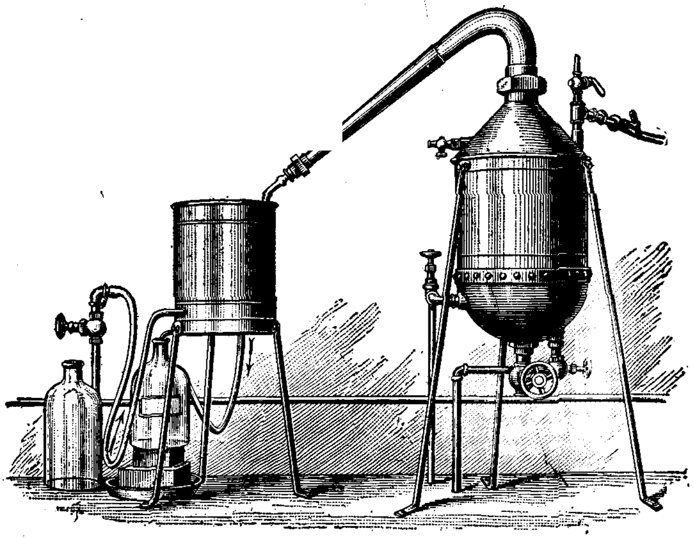

FIG. 13.—Still for Ammonia-free Water.

slight precipitate by adding 0.750 gram powdered KI. Then add 150 grams of KOH dissolved in 250 c.c. of water. Make up to the liter and allow it to stand overnight to settle. This solution should give the required color with ammonia within five minutes, and should not precipitate within two hours.

Alkaline Permanganate.—Dissolve 233 grams of the best stick potash in 350 c.c. of distilled water. Filter this strong

solution, if necessary, through a layer of glass wool on a porcelain filter-plate. Dilute with 700 to 750 c.c. of distilled water to a sp. gr. of 1.125, add 8 grams of potassium permanganate crystals, and boil down to one liter to free the solution from nitrogen. Each new lot of reagent must be tested before being used, but when the chemicals used are all good there should be no correction needed for ammonia in the solution.

Standard Ammonia Solution.—Dissolve 3.8215 grams chemically pure NH_4Cl in a liter of water free from ammonia. This is the strong solution from which the standard solution is made by diluting 10 c.c. to a liter with water free from ammonia. One c.c. of the standard solution = 0.00001 gram nitrogen. This solution, like the nitrite standard and other dilute solutions, must be preserved in sterilized bottles protected from dust and organic matter.

For Nitrites.—*Standard Nitrite Solution.*—The pure silver nitrite used in making this solution is prepared by the double decomposition of silver nitrate and potassium nitrite, and repeated crystallizations from water of the rather difficultly soluble silver nitrite. 1.1 grams of this silver nitrite are dissolved in nitrite-free water, the silver completely precipitated by the addition of the standard salt solution used in the determination of chlorine, and the solution made up to 1 liter. 100 c.c. of this strong solution are diluted to 1 liter, and 10 c.c. of this last solution again diluted to 1 liter. The final solution is the one used in preparing standards. 1 c.c. = 0.0000001 gram nitrogen.

Sulphanilic Acid.—Dissolve 3.3 grams sulphanilic acid in 750 c.c. of water by the aid of heat, and add 250 c.c. glacial acetic acid.

Naphtylamine Acetate.—Boil 0.5 gram of α-naphtylamine in 100 c.c. of water in a small Erlenmeyer flask for about five

minutes, filter through a plug of washed absorbent cotton, add 250 c.c. glacial acetic acid, and dilute to a liter.

For Nitrates.—*Standard Nitrate Solution.*—Dissolve 0.720 gram of pure recrystallized KNO_3 in 1 liter of water. Evaporate 10 c.c. of this strong solution cautiously on the water-bath, moisten quickly and thoroughly with 2 c.c. of phenol-disulphonic acid, and dilute to 1 liter for the standard solution. 1 c.c. = 0.000001 gram nitrogen.

Phenol-disulphonic Acid.—Heat together 3 grams synthetic phenol with 37 grams pure, concentrated H_2SO_4 in a boiling-water bath for six hours.

For Kjeldahl Process.—*Sulphuric Acid.*—Sp. gr. 1.84. This should be free from nitrogen. May be obtained from Baker and Adamson, Easton, Pa.

Potassium Hydroxide.—Dissolve 350 grams of the best stick potash in 1.25 liters of water and boil down to something less than a liter with 3 grams of permanganate crystals. When cold, dilute to a liter with water free from ammonia.

For Phosphates.—*Ammonium Molybdate.*—Dissolve 50 grams of the pure neutral salt in a liter of distilled water.

Nitric Acid (sp. gr. 1.07).—One part of acid (sp. gr. 1.42) to five parts of water.

Standard Phosphate Solution.—Dissolve 0.5324 gram of pure crystallized sodium phosphate ($Na_2HPO_4.12H_2O$) in freshly distilled water, add 100 c.c. of nitric acid (1.07), and dilute to 1 liter. 1 c.c. = 0.0001 gram P_2O_5. The solution keeps without change for several months if preserved in well-stoppered bottles of hard glass; after a longer time it becomes slightly stronger, owing to the silica dissolved from the glass.

For Chlorine.—*Salt Solution.*—Dissolve 16.48 grams of fused NaCl in a liter of distilled water. For the standard

solution dilute 100 c.c. of this strong solution to 1 liter. 1 c.c. = 0.001 gram chlorine.

Silver Nitrate.—Dissolve about 2.42 grams of $AgNO_3$ (dry crystals) in 1 liter of chlorine-free water. 1 c.c. = .0005 gram Cl, approximately. Standardize against the NaCl solution.

Potassium Chromate.—Dissolve 50 grams neutral K_2CrO_4 in a little distilled water. Add enough $AgNO_3$ to produce a slight red precipitate. Filter and make the filtrate up to a liter with water free from chlorine.

Milk of Alumina for Decolorization.—Dissolve 125 grams of potash or ammonia alum in a liter of distilled water. Precipitate the $Al(OH)_3$ by the cautious addition of NH_4OH. Wash the precipitate in a large jar by decantation until free from chlorine, nitrites, and ammonia.

For Hardness.—*Standard Calcium Chloride Solution.*—Dissolve 0.200 gram of pure Iceland spar in dilute HCl, taking care to avoid loss by spattering, and evaporate to dryness several times, to remove the excess of acid. Dissolve the calcium chloride thus formed in 1 liter of water.

Standard Soap Solution.—Dissolve 100 grams of the best white, dry castile soap in a liter of 80 per cent. alcohol. Of this strong solution dissolve 75–100 c.c. in a liter of 70 per cent. alcohol. This solution must have 70 per cent. alcohol added to it until 14.25 c.c. of it give the required lather with 50 c.c. of the above $CaCl_2$ solution.

Erythrosine Indicator.—Dissolve 0.1 gram of erythrosine in 1 liter of water.

For Iron.—*Standard Iron Solution.*—Dissolve 0.86 gram of ferric ammonium alum, $(NH_4)_2SO_4.Fe_2(SO_4)_3.24H_2O$, or a corresponding amount of the potassium salt in 500 c.c. of water, add 5 c.c. HNO_3 (1.20), and dilute to 1 liter. 1 c.c. = 0.0001 gram Fe.

Potassium Sulphocyanide.—5 grams per liter.

Hydrochloric Acid.—1 part HCl (sp. gr. 1.20) to 1 part of water.

Potassium Permanganate.—5 grams $KMnO_4$ in 1 liter of water.

For Dissolved Oxygen.—

(*a*) 48 grams of $MnSO_4.4H_2O$ in 100 c.c. of water.

(*b*) 360 grams of NaOH *and* 100 *grams of* KI *in* 1 *liter* of water.

(*c*) HCl, sp. gr. 1.20.

Sodium Thiosulphate Solution.—Dissolve 25 grams of pure recrystallized sodium thiosulphate in 1 liter of water. Dilute 100 c.c. to 1 liter and standardize against a known $K_2Cr_2O_7$ solution.

For Lead.—*Standard Lead Solution.*—To a strong solution of lead acetate add a slight excess of H_2SO_4, filter off and wash the precipitate. Dissolve it in ammonium acetate solution, made by neutralizing glacial acetic acid with strong ammonia. Make up to a known volume and determine the lead in an aliquot part by precipitating with $K_2Cr_2O_7$ and weighing the lead chromate. Dilute an aliquot part to make a convenient standard, say about 1 c.c. = 0.001 gram of Pb.

FOOD ANALYSIS.

For Milk Analysis.—*Gasolene* (*Petroleum Ether*).—Gasolene, sp. gr. 86° B., which leaves no residue upon evaporation at 60° F.

Fehling's Solution.—(*a*). Dissolve 69.28 grams of C.P. crystallized copper sulphate, carefully dried between blotting-paper, in 1 liter of water including 1 c.c. of strong sulphuric acid.

(*b*) Dissolve 346 grams of sodium potassium tartrate and 80 grams of sodium hydroxide in 1 liter of water.

Potassium Ferrocyanide.—Dissolve 1 part in 50 parts of water.

Acid Mercuric Nitrate.—Dissolve mercury in double its weight of nitric acid (sp. gr. 1.42) and dilute the solution with five times its volume of water.

For Butter Analysis.—*Pumice.*—Bits of ignited pumice, about the size of a pea, dropped while hot into water and bottled for use.

Alcohol (for Reichert-Meissl method).—95 per cent. alcohol redistilled from potassium hydroxide.

Potassium Hydroxide (for Reichert-Meissl method).—One part good quality caustic potash dissolved in one part of water.

Glycerine-soda (for Leffman-Beam method).—Add 20 c.c. of a 50 per cent. solution of sodium hydroxide to 180 c.c. of pure concentrated glycerine. The soda must be as nearly free from carbonate as possible.

Iodine Solution (for Hanus' method).—This is conveniently made up according to the directions of Hunt.* Dissolve 13.2 grams iodine in 1 liter of glacial acetic acid (99 per cent., showing no reduction with bichromate and sulphuric acid). This will best be done by adding the acetic acid in portions and heating on the water-bath with frequent shaking. To the cold solution add enough bromine to double the halogen content as shown by titration. Three c.c. of bromine is sufficient. A slight excess of iodine is not detrimental.

Potassium Iodide.—Dissolve 200 grams of potassium iodide in 1 liter of water.

For Cereals.—*Anhydrous Ether.*—Wash ordinary ether several times with distilled water and add solid caustic

---

* *J. Soc. Chem. Ind.*, 21 (*1902*), 454.

potash until most of the water has been removed. Then add small pieces of clean metallic sodium until there is no further evolution of hydrogen gas. The ether thus prepared should be kept over metallic sodium and the bottle should be only lightly stoppered, in order to allow of the escape of any accumulated gas.

Potassium Sulphide.—Dissolve 40 grams of the crystallized salt in 1 liter of water and filter through glass wool.

Potassium Hydroxide (for Kjeldahl process).—Sp. gr. = 1.25. Dilute a liter of this solution to about 1.25 liters and boil down to something less than a liter with 3 grams of potassium permanganate. When cold dilute to a liter.

Basic Lead Acetate.—Boil for half an hour 440 grams of lead acetate and 264 grams of litharge in 1500 c.c. of water. Cool and dilute to 2 liters. Allow to settle and siphon off the clear liquor. (Sp. gr. about 1.27, containing about 35 per cent. of the basic salt.)

Millon's Reagent.—Dissolve mercury in twice its weight of nitric acid (sp. gr. 1.42) and dilute the solution obtained with three times its volume of water.

BIBLIOGRAPHY.

THE following list comprises some of the more important works bearing on the subjects treated in the preceding pages. A bibliography of the chemistry of foods complete to 1882 may be found in the Second Annual Report of the New York State Board of Health, and more or less complete bibliographies are to be found in Sadtler's "Industrial Organic Chemistry" and Blyth's "Composition and Analysis of Foods."

AIR.

Air and Rain. R. Angus Smith. Longmans, Green & Co. London. 1872.

Air and its Relations to Life. Walter N. Hartley. D. Appleton & Co. New York. 1875.

Report on the Air of Glasgow. E. M. Dixon. Robert Anderson. Glasgow. 1877.

Recherches sur l'Air Confiné. A. Braud. Baillière et Fils. Paris. 1880.

Air Analysis. J. A. Wanklyn and W. J. Cooper. Kegan Paul, Trench, Trübner & Co. London. 1890.

Les Poisons de l'Air. N. Grehaut. Baillière et Fils. Paris. 1890.

Treatise on Hygiene and Public Health. Vol. I. Thomas Stevenson and S. F. Murphy. Blakiston, Son & Co. Phila. 1892.

Air and Water. Vivian B. Lewes. Methuen & Co. London. 1892.

Methods for the Determination of Organic Matter in Air. D. H. Bergey. Smithsonian Institution. Washington, D. C. 1896.

The Detection and Measurement of Inflammable Gas and Vapor in the Air. Frank Clowes. Crosby, Lockwood & Son. London. 1896.

VENTILATION.

Heating and Ventilation of the New Building, Mass. Inst. Tech. S. H. Woodbridge. Tech. Quart., 2, 76. 1888.

Heating and Ventilation. J. S. Billings. Sanitary Engineer. New York. 1893.

Heating and Ventilating Buildings. Rolla C. Carpenter. John Wiley & Sons. New York. 1895.

WATER.

Report of the Royal Commission on Water Supply. Great Britain Parliamentary Documents. London. 1869–'70.

Sixth Report of Rivers Pollution Commission, Great Britain. London. 1876.

Water Softening and Scientific Filtration. Walter George Atkins. E. & F. N. Spon. London. 1880.

National Board of Health Report for 1882.

Water Supply (Considered mainly from a Chemical and Sanitary Standpoint). W. R. Nichols. John Wiley & Sons. New York. 1883.

Water Analysis for Sanitary Purposes. E. Frankland. John Van Voorst. London. 1890.

The Organic Analysis of Potable Waters. J. A. Blair. 1890.

Drinking Water and Ice Supplies. T. Mitchell Prudden. G. P. Putnam & Sons. New York. 1891.

Potable Water. Floyd Davis. Silver, Burdett & Co. New York. 1891.

The Action of Water on Lead. John Henry Garrett. H. K. Lewis. London. 1891.

Treatise on Hygiene and Public Health. Vol. I. Thomas Stevenson and S. F. Murphy. Blakiston, Son & Co. Phila. 1892.

Sewage Disposal in the United States. Geo. W. Rafter and M. N. Baker. D. Van Nostrand Co. New York. 1894.

Les Eaux-d'Alimentation, Épuration, Filtration, Sterilization. Edm. Guinochet. Baillière et Fils. Paris. 1894.

Micro-Organisms in Water. Percy F. Frankland and Mrs. Percy F. Frankland. London. 1894.

The Filtration of Public Water Supplies. Allen Hazen. John Wiley & Sons. New York. 1895.

Examination of Water for Sanitary and Technical Purposes. Henry Leffman. Blakiston, Son & Co. Phila. 1895.

Sewage Disposal on the Farm and Protection of Drinking Water. Theobald Smith. U. S. Dept. Agr., Farmers' Bull. 43. 1896.

Water Supply (Considered Principally from a Sanitary Standpoint). W P. Mason. John Wiley & Sons. New York. 1903.

Water Analysis. J. A. Wanklyn and E. T. Chapman. Tenth Ed. Kegan Paul, Trench, Trübner & Co. London. 1896.

Water and Water Supplies. John C. Thresh. Rebman Pub. Co. London. 1896.

Mikroskopische Wasseranalyse. Carl Mez. J. Springer. Berlin. 1898.

A Simple Method of Water Analysis. John C. Thresh. J. & A. Churchill. London. 1898.

Water Purification at Louisville, Ky. Geo. W. Fuller. D. Van Nostrand Co. New York. 1898.

Report on Water Purification at Cincinnati, O. Geo. W. Fuller. Board of Trustees, Cincinnati. 1899.

Report of Filtration Commission, Pittsburgh, Pa. 1899.

Examination of Water (Chemical and Bacteriological). William P. Mason. John Wiley & Sons. New York. 1899.

The Microscopy of Drinking Water. Geo. C. Whipple. John Wiley & Sons. New York. 1899.

Geological Survey. State of Washington. 1901.

Report of Streams Examination, Sanitary District of Chicago. 1902.

Chemical Survey of the Waters of Illinois. 1897–1902.

Water and its Purification. S. Rideal. Crosby, Lockwood & Son. London. 1902.

Report on Water Purification Investigations. New Orleans Sewerage and Water Board. 1903.

Elements of Water Bacteriology. S. C. Prescott and C.-E. A. Winslow. John Wiley & Sons. New York. 1904.

State Board of Health Reports for Massachusetts, Michigan, Illinois, Ohio. The Mass. Reports for 1872–75 and 1890–1900, especially, contain many valuable papers, the following being some of the most important of them:

Chemical Examination of Water and Interpretation of Analyses. Thomas M. Drown. Rep. Mass State Board of Health, 1892, 319.

Discussion of Special Topics Relating to the Quality of Public Water Supplies. F. P. Stearns and T. M. Drown. Rep. Mass. State Board of Health, 1890, 717.

On the Amount of Dissolved Oxygen contained in Waters of Ponds and Reservoirs at Different Depths. Thomas M. Drown. Rep. Mass. State Board of Health, 1891, 373.

On the Amount of Dissolved Oxygen contained in Waters of Ponds and Reservoirs at Different Depths in Winter under the Ice. Thomas M. Drown. Rep. Mass. State Board of Health, 1892, 333.

On the Mineral Contents of Some Natural Waters in Mass. Thomas M. Drown. Rep. Mass. State Board of Health, 1892, 345.

The Effect of the Aeration of Natural Waters. Thomas M. Drown. Rep. Mass. State Board of Health, 1891, 385.

In addition to the above the following papers contain much information of value on special topics relating to water supply and water analysis:

Chemical Examination of Drinking Water. Thomas M. Drown. Proc. Soc. Arts., M. I. T., 1887–8, 87.

The Analysis of Water—Chemical, Microscopical, and Bacteriological. Thomas M. Drown. J. N. E. Water Works Assoc., 4 (1889), 79.
On the Loss on Ignition in Water Analysis. Thomas M. Drown. Tech. Quart., 2 (1888), 132.
The Odor and Color of Surface Waters. Thomas M. Drown. Tech. Quart., 1 (1888), 250.
Reduction of Nitrates by Bacteria. Ellen H. Richards and George W. Rolfe. Tech. Quart., 9 (1896), 40.
The Purification of Water by Freezing. Thomas M. Drown. J. N. E. Water Works Assoc., 8 (1893), 46.
The Filtration of Natural Waters. Thomas M. Drown. J. of the Assoc. of Eng. Soc., 9 (1890), 356.
A Study of Self-Purification in the Sudbury River. A. G. Woodman, C.-E. A. Winslow, and P. Hansen. Tech. Quart., 15, 1902.
Normal Distribution of Chlorine in Connecticut. H. E. Smith and F. S. Hollis. Rept. Conn. State B'd Health, 1902.
Water Supplies of S. E. Alaska and the Black Hills of S. Dak. E. H. Richards. Tech. Quart., 16, 1903.
Notes on the Potable Waters of Mexico. E. H. Richards. Trans. Am. Inst. Min. Eng., 1901.
Rainfall on the Pacific Coast and the Factors of Water Supply in California. J. Assoc. Eng. Soc., 1903.

FOOD.

The list given here is limited to books published since 1890.

Traité Général d'Analyse des Beurres. A. J. Zune. H. Lamartin. Paris. 1892.
Die Menschlichen Nahrungs- u. Genussmittel. J. König. Julius Springer. Berlin. 1893.
Foods and Dietaries. R. W. Burnet, M.D. P. Blakiston, Son & Co. Phila. 1893.
Analyse des Matières Alimentaires et Recherche de Leur Falsifications. Ch. Girard et A. Dupré. Vve. Ch. Dunod & P. Vicq. Paris. 1894.
Animal and Vegetable Oils, Fats, Butters and Waxes. C. R. Alder Wright. Griffin & Co. London. 1894.
Chemistry of Wheat, Flour, and Bread. Wm. Jago. Simpkin Marshall. London. 1895.
The Food Products of the World. Dr. Mary E. Green. The Hotel World. Chicago. 1895.
The Story of Germ Life. H. W. Conn. Appleton & Co. New York. 1897.
The Relation of Food to Health. George H. Townshend. Witt Publishing Co. St. Louis. 1897.

The Analysis of Food and Drugs. Part I: Milk and Milk Products. T. H. Pearmain and C. G. Moor. Baillière Tindall & Cox. London. 1897.

Principles and Practice of Agricultural Analysis. Harvey W. Wiley. Chem. Pub. Co. Easton, Pa. 1897.

Testing Milk and its Products. E. H. Farrington and F. W. Woll. Mendota Book Co. Madison, Wis. 1898.

Chemical Analysis of Oils, Fats, and Waxes. J. Lewkowitsch. Macmillan & Co. London. 1898.

Commercial Organic Analysis. A. H. Allen. Third Ed. Rev. by H. Leffman. Blakiston, Son & Co. Phila. 1898.

Die Untersuchung landwirtschaftlich und gewerblich wichtiger Stoffe. J. König. Paul Parey. Berlin. 1898.

Food Materials and their Adulterations. Ellen H. Richards. Home Science Pub. Co. Boston. 1898.

Plain Words about Food. The Rumford Kitchen Leaflets. Ellen H. Richards, Ed. Home Science Pub. Co. Boston. 1899.

Muscle, Brain, and Diet: A Plea for Simpler Foods. E. H. Miles. Sonnenschien. London. 1900.

A Handbook of Industrial Organic Chemistry. S. P. Sadtler. J. B. Lippincott Co. Phila. 1900.

Flesh Foods with Methods for their Chemical, Microscopical, and Bacteriological Examination. C. A. Mitchell. Griffin & Co. London. 1900.

Food and the Principles of Dietetics. R. Hutchinson. Wood. New York. 1901.

The Cost of Food: A Study in Dietaries. E. H. Richards. J. Wiley & Sons. New York. 1901.

Select Methods in Food Analysis. H. Leffman and W. Beam. P. Blakiston's Son & Co. Phila. 1901.

Suggested Standards for Food and Drugs. C. G. Moor. Baillière, Tindall & Cox. London. 1902.

Enzymes and their Applications. J. Effront. Trans. S. C. Prescott. J. Wiley & Sons. New York. 1902.

Foods: their Composition and Analysis. A. W. Blyth and M. W. Blyth. Griffin & Co. London. 1903.

The following bulletins of the United States Department of Agriculture will also be found useful for study or reference on the general question of food:

Office of Experiment Stations, Bulletins.

No. 9. Fermentations of Milk. 1892.
11. Analyses of American Feeding Stuffs. 1892.
21. Chemistry and Economy of Food. 1895.

No. 25. Dairy Bacteriology. 1895.
28. (Rev. Ed.) Chemical Composition of American Food Materials. 1895.
29. Dietary Studies at the University of Tennessee. 1896.
31. " " " " " " Missouri. 1896.
32. " " " Purdue University. 1896.
34. Carbohydrates of Wheat, Maize, Flour, and Bread. 1896.
35. Food and Nutrition Investigations in New Jersey. 1896.
37. Dietary Studies at the Maine State College. 1897.
38. " " —Food of the Negro in Alabama. 1897.
40. " " in New Mexico. 1897.
43. Composition and Digestibility of Potatoes and Eggs. 1897.
44. Metabolism of Nitrogen and Carbon in the Human Organism. 1897.
45. A Digest of Metabolism Experiments. 1897.
46. Dietary Studies in New York City. 1898.
52. Nutrition Investigations in Pittsburgh, Pa. 1898.
53. " " at the University of Tennessee. 1898.
54. " " in New Mexico. 1898.
55. Dietary Studies in Chicago. 1898.
63. Experiments on the Conservation of Energy in the Human Body. 1899.
66. Creatin and Creatinin. 1899.
67. Bread and Bread Making. 1899.
69. Experiments on the Metabolism of Matter and Energy in the Human Body. 1899.
71. Dietary Studies of Negroes. 1899.
75. " " " University Boat Crews. 1900.
84. Nutrition Investigations at the California Agr. Expt. Station. 1900.
85. Investigations on the Digestibility and Nutritive Value of Bread. 1900.
89. Effect of Muscular Work on Digestion of Food and Metabolism of Nitrogen. 1901.
91. Nutrition Investigations at the University of Illinois, etc. 1901.
98. Effect of Severe and Prolonged Muscular Work on Food Consumption, Digestibility, and Metabolism. 1901.
101. Studies on Bread and Bread Making. 1901.
102. Losses in Cooking Meat. 1901.
107. Nutrition Investigations among Fruitarians and Chinese. 1901.
109. Metabolism of Matter and Energy in the Human Body. 1902.
116. Dietary Studies in New York City. 1902.
117. Effect of Muscular Work upon Digestibility of Food and Metabolism of Nitrogen. 1902.
121. Metabolism of Nitrogen, Sulphur, and Phosphorus in the Human Organism. 1902.
126. Digestibility and Nutritive Value of Bread. 1903.
129. Dietary Studies: Boston and other Places. 1903.
132. Further Investigations among Fruitarians. 1903.

Division of Chemistry, Bulletins.

No. 13. Foods and Food Adulteration—(Ten Parts). 1887–1902.
45. Analyses of Cereals. 1895.
46. Official Methods of Analysis. 1895.
50. Composition of Maize. 1898.
59. Composition of American Wines. 1900.
61. Pure Food Laws of Foreign Countries. 1901.
65. Provisional Methods for Analysis of Foods. 1902.
66. Fruits and Fruit Products. 1902.
69. Foods and Food Control. 1902.
72. American Wines at Paris Exposition of 1900. 1903.

Farmers' Bulletins.

No. 23. Foods: Nutritive Value and Cost. 1894.
29. Souring of Milk. 1895.
34. Meats: Composition and Cooking. 1896.
74. Milk as Food. 1898.
85. Fish as Food. 1898.
93. Sugar as Food. 1899.
112. Bread and the Principles of Bread Making. 1900.
121. Beans, Peas, and other Legumes as Food. 1900.
128. Eggs and their Uses as Food. 1901.
131. Household Tests for Detection of Oleomargarine and Renovated Butter. 1901.
142. The Nutritive and Economic Value of Food. 1901.

INDEX.

	PAGE
Acceptable water	80
Acid, boric, in milk	186
mercuric nitrate, reagent	244
, nitric, reagent	241
, phenol-disulphonic, preparation of	241
, salicylic, in milk	186
, sulphanilic, reagent for nitrite test	240
, sulphuric, free from nitrogen	241
, " , reagent for air analysis	238
Acidity of milk	169
Acids, free, in wine, estimation of	216
Adamkiewicz reaction	206
Adams' method for fat in milk	172
Adulteration, definition of	155
, extent of	157
, of milk, detection of	184
, special cases of	159
Air, amount required per capita	20
of cities	17
, composition of expired	10
, " " inspired	10
, dust in	18
, effect of humidity in	14
essential to life	3
, occasional impurities in	16, 17
, variations in composition of	12
, water-vapor in	14
Air-currents, location of	25
Albumin in milk, determination of	183
Albuminoid ammonia in water, determination of	98
, *relation to organic nitrogen*	106
Alcohol, *determination of*	213
, table for calculating	230

PAGE
Alkaline permanganate, reagent for water analysis........................ 239
Alkalinity of milk, determination of.................................. 170
in water, " " 117
Alum in water, " " 134
Alumina, milk of, reagent.. 242
Aluminum hydroxide, reagent for water analysis........................ 242
Ammonia, presence in water.. 76
, standard solution, preparation of................................ 240
in water, determination of.. 98
Ammonium molybdate, reagent 241
Analyses, interpretation of.. 82
Aniline orange in milk, detection of.................................. 185
Annatto in milk, detection of.. 185
Aqueous vapor, table of tension of.................................... 222
"Aroma" of butter.. 191
Ash in cereals, determination of...................................... 203
of milk, composition of.. 172
" " , determination of.. 171
in wine, " " 215

Babcock method for fat in milk.. 174
Barium hydroxide, reagent for air analysis............................ 238
Basic lead acetate, preparation of.................................... 245
Beer, analysis of... 219
Benzoic acid in wine, detection of.................................... 219
Bibliography.. 247
Biological examination of water....................................... 132
Biuret reaction... 205
Boric acid in milk, detection of...................................... 186
Brook-water... 84
Butter, complete analysis... 201
, composition of.. 189
, danger from... 190
, melting-point of... 200
, microscopic examination of...................................... 199
, refractive index of.. 200
, "renovated".. 190
, simple tests for... 198
, specific gravity of.. 200
Butter-fat, composition of.. 189
, examination of.. 191

Caisson disease... 13
Calcium chloride, standard solution of................................ 242
Caramel in milk, detection of... 185

PAGE

Carbohydrates in cereals, separation of. 207
, food value of 145
Carbon dioxide, amount expired. 15
, determination of, in air. 27
as a disturbing factor. 12
, "popular tests" for. 40
, properties of. 21
, table of weight of cubic centimeter of. 223
a test of ventilation. 23
in water, determination of. 126
Carbon monoxide, detection of, in air. 49
, effect on blood. 16
, estimation of, in air. 50
Carbonaceous matter in water, determination of. 110
Carbonic acid in water, determination of free. 126
Casein in milk, determination of. 183
Change on ignition. 115
Chlorine in ground-water. 90
" water, determination of. 111
" " , source of. 71
Clark's method for hardness. 115
Classification of waters. 83
Cohen method for carbon dioxide. 48
Collection of water samples. 94
Color standards for water. 128, 129
of water, determination of. 127
Coloring-matter in butter, detection of. 201
in milk, " ". 184
in wine, " ". 217
Combustion, heat of, measure of food value. 146
Cream, detection of gelatine in. 188
, estimation of. 168
"Crowd-poison". 18, 24
Crude fibre, determination of. 211
Cycle of nitrogen. 65

Dextrine in cereals, determination of. 207
Dietaries. 150
Dissolved oxygen, reagents for, preparation of. 243
in water, determination of. 121
Distilled water 73
Dust, estimation of, in air. 54

Erythrosine indicator, preparation of. 242
Ether, anhydrous, preparation of. 244

PAGE

Ether extract of cereals........ 203
Extract, table for calculating........ 232
in wine, determination of........ 214

Fat in milk, estimation of........ 172
Fats, value of........ 144
Fehling's solution, preparation of........ 243
Fibre, crude, determination of........ 211
Filters........ 87
Fitz's method for carbon dioxide........ 45
Fixed acid in wine, calculation of........ 217
Food, definition of........ 141
, importance of........ 5
, importance of study of........ 139
principles........ 142
, proper choice of........ 9
, sanitary aspect of........ 7
, summary of dangers from........ 160
, variation in nitrogen content of........ 7
Food materials, composition of common........ 148, 149
Food values, importance of knowledge of........ 15
Formaldehyde in milk, detection of........ 186
"Formalin," see Formaldehyde.

Gasolene, reagent........ 243
Gelatine in cream, detection of........ 188
Glycerine in wine, estimation of........ 215
Glycerine-soda, reagent........ 244
Ground-water, history of........ 62

Hanus's method for iodine value........ 195
Hardness, table of........ 228
in water, determination of........ 115
Heat of combustion, a measure of food value........ 146
Hehner's method for fixed fatty acids........ 194
for hardness........ 117
Humidity in air, effect of........ 14

Ice, rules for use of........ 72
Interpretation of water analysis........ 82
Iodine solution for Hanus's method, preparation of........ 244
Iodine value, determination of........ 195
Iron, standard solution of........ 242
in water, determination of........ 120

Kjeldahl method for nitrogen........ 203

PAGE
Lake-water.. 84
Lead acetate (basic) preparation of.. 245
, standard solution of.. 243
in water determination of.. 136
Leffman and Beam method for volatile acids.. 194
Lime-water, reagent for air analysis.. 238
Logarithms.. 234–237
Loss on ignition, in water, determination of.. 113

Malt extract, preparation of.. 209
liquors, analysis of.. 219
Meteoric water.. 59
Micro-organisms, estimation of, in air.. 51
, role of, in water.. 65
Milk, composition of.. 165
, fermentations of.. 166
, reaction of.. 169
, relation of constituents of.. 177
Milk-scale.. 178
Milk-sugar, determination of.. 179
Millon's reaction.. 206
reagent, preparation of.. 245
Mineral salts in food.. 146
substances in water.. 91
"Mountain-sickness".. 13
"Must," composition of.. 211

Naphthylamine acetate, reagent for nitrite test.. 240
Nessler's reagent, preparation of.. 239
Nitrate, standard solution, preparation of.. 241
Nitrates in ground-water.. 89
in water, determination of.. 108
Nitrite, standard solution, preparation of.. 240
Nitrites, estimation of, in air.. 51
in water, determination of.. 106
Nitrogen, cycle of.. 65
, determination of, by Kjeldahl method.. 203
essential to living matter.. 75
, total organic, determination of, in water.. 104
Nitrogenous substances, importance of.. 142

Odor of water, analytical value of.. 86
, detection of.. 130
Opacity of milk, determination of.. 168

PAGE
Organic matter in air.... 52
nitrogen in water, determination of.... 104
"Oxygen consumed," determination of.... 119
Oxygen, dissolved in water, determination of.... 121
table for.... 228

Pentosans, determination of.... 210
Pettenkofer method for carbon dioxide.... 28
Phosphate, standard solution, preparation of.... 241
Phosphates, in water, determination of.... 118
"Popular tests" for carbon dioxide.... 70
Potassium chromate, reagent, preparation of.... 242
ferrocyanide, reagent.... 244
hydroxide, reagent.... 241
iodide, reagent.... 244
sulphide, reagent.... 245
sulphocyanide, reagent.... 242
Predigested foods.... 156
Preservatives in milk.... 186
wine.... 218
Pressure, influence on respiratory exchange.... 13
Proteids of milk, determination of.... 183
, qualitative test for.... 205
Pumice, for butter analysis, preparation of.... 244
Purified *vs.* clarified water.... 69

Rancidity of butter-fat.... 191
Reagents, preparation of.... 238
Reichert-Meissl method.... 192
number.... 193
"Renovated" butter.... 190
Residue on evaporation, determination of.... 113
Respiratory exchange.... 10
quotient.... 14
River-waters.... 85

"Safe" water.... 75, 79
Salicylic acid in milk, detection of.... 186
in wine, " ".... 219
Salt in butter, determination of.... 200
Samples, collection of water.... 94
Sanitary chemistry, scope of.... 1
science, importance of.... 2
Sediment of water, estimation of.... 133
"Sewer-air".... 17, 24

PAGE

Shallow wells ... 88
Silver nitrate, chlorine reagent ... 242
Soap, standard solution of ... 242
Sodium chloride, standard solution ... 241
Sophistication, meaning of ... 155
Solids, of milk, determination of ... 170
Soot, estimation of, in air ... 54
Specific gravity of milk, estimation of ... 167
table for correcting ... 229
"Spoon test" for butter ... 198
Springs ... 88
Starch, in cereals, determination of ... 208
milk, detection of ... 184
, soluble, determination of ... 208
Storage of water ... 69, 85
Sucrose in milk, detection of ... 184
Sugar in cereals, determination of ... 207
in milk, detection of ... 184
Sugar of milk, determination of ... 179
Surface-water, character of ... 70
Surface-waters ... 83, 87

"Test-solution," preparation of ... 40
Trade names ... 158
Turbidity of water, estimation of ... 133

Ventilation, apparatus to illustrate ... 24
, natural *vs.* artificial ... 23
a necessity ... 19
, principle of ... 22
, requirements of ... 26
, to test efficiency of ... 24
Vital capacity ... 10
Volatile acids in wine, determination of ... 216

Walker method for carbon dioxide ... 34
Water, acceptable ... 80
Water analysis, blank form for ... 138
, points to determine in ... 78
, statement of results ... 137
, value of ... 92
Water in butter, determination of ... 200
in cereals, " " ... 202
, circulation of ... 59
, classification of ... 83

PAGE

Water, daily quantity needed 4
, free from ammonia, preparation of 238
, the ideal drinking-water 57
, illustration of contamination of 60
, legal restrictions upon use of 55
in milk, determination of 184
, need of 4
, passage through the ground 62
, preliminary inspection of source of 78
, presence of organisms in 64
, its relation to health 64
, solvent power of 63
, storage of 69
Waterhouse test for butter 198
Water-pipes 92
Waters, polluted, table of 226
, table of average composition of 224, 225
Water-vapor in air 14
Well-water 88
Werner-Schmid method for fat in milk 175
Wine analysis, object of 211
Wines, classification of 212
, composition of 211

Xanthoproteic reaction 206

SHORT-TITLE CATALOGUE

OF THE

PUBLICATIONS

OF

JOHN WILEY & SONS,

NEW YORK.

LONDON: CHAPMAN & HALL, LIMITED.

ARRANGED UNDER SUBJECTS.

Descriptive circulars sent on application. Books marked with an asterisk are sold at *net* prices only, a double asterisk (**) books sold under the rules of the American Publishers' Association at *net* prices subject to an extra charge for postage. All books are bound in cloth unless otherwise stated.

AGRICULTURE.

Armsby's Manual of Cattle-feeding....12mo, $1 75
Principles of Animal Nutrition....8vo, 4 00
Budd and Hansen's American Horticultural Manual:
Part I.—Propagation, Culture, and Improvement....12mo, 1 50
Part II.—Systematic Pomology....12mo, 1 50
Downing's Fruits and Fruit-trees of America....8vo, 5 00
Elliott's Engineering for Land Drainage....12mo, 1 50
Practical Farm Drainage....12mo, 1 00
Green's Principles of American Forestry....12mo, 1 50
Grotenfelt's Principles of Modern Dairy Practice. (Woll.)....12mo, 2 00
Kemp's Landscape Gardening....12mo, 2 50
Maynard's Landscape Gardening as Applied to Home Decoration....12mo, 1 50
Sanderson's Insects Injurious to Staple Crops....12mo, 1 50
Insects Injurious to Garden Crops. (*In preparation.*)
Insects Injuring Fruits. (*In preparation.*)
Stockbridge's Rocks and Soils....8vo, 2 50
Woll's Handbook for Farmers and Dairymen....16mo, 1 50

ARCHITECTURE.

Baldwin's Steam Heating for Buildings....12mo, 2 50
Berg's Buildings and Structures of American Railroads....4to, 5 00
Birkmire's Planning and Construction of American Theatres....8vo, 3 00
Architectural Iron and Steel....8vo, 3 50
Compound Riveted Girders as Applied in Buildings....8vo, 2 00
Planning and Construction of High Office Buildings....8vo, 3 50
Skeleton Construction in Buildings....8vo, 3 00
Briggs's Modern American School Buildings....8vo, 4 00
Carpenter's Heating and Ventilating of Buildings....8vo, 4 00
Freitag's Architectural Engineering. 2d Edition, Rewritten....8vo, 3 50
Fireproofing of Steel Buildings....8vo, 2 50
French and Ives's Stereotomy....8vo, 2 50
Gerhard's Guide to Sanitary House-inspection....16mo, 1 00
Theatre Fires and Panics....12mo, 1 50
Holly's Carpenters' and Joiners' Handbook....18mo, 0 75
Johnson's Statics by Algebraic and Graphic Methods....8vo, 2 00

Kidder's Architect's and Builder's Pocket-book. Rewritten Edition.
16mo, morocco, 5 00
Merrill's Stones for Building and Decoration..........8vo, 5 00
Monckton's Stair-building..........4to, 4 00
Patton's Practical Treatise on Foundations..........8vo, 5 00
Peabody's Naval Architecture..........8vo, 7 50
Siebert and Biggin's Modern Stone-cutting and Masonry..........8vo, 1 50
Snow's Principal Species of Wood..........8vo, 3 50
Sondericker's Graphic Statics with Applications to Trusses, Beams, and Arches.
8vo, 2 00
Wait's Engineering and Architectural Jurisprudence..........8vo, 6 00
Sheep, 6 50
Law of Operations Preliminary to Construction in Engineering and Architecture..........8vo, 5 00
Sheep, 5 50
Law of Contracts..........8vo, 3 00
Wood's Rustless Coatings: Corrosion and Electrolysis of Iron and Steel...8vo, 4 00
Woodbury's Fire Protection of Mills..........8vo, 2 50
Worcester and Atkinson's Small Hospitals, Establishment and Maintenance, Suggestions for Hospital Architecture, with Plans for a Small Hospital.
12mo, 1 25
The World's Columbian Exposition of 1893..........Large 4to, 1 00

ARMY AND NAVY.

Bernadou's Smokeless Powder, Nitro-cellulose, and the Theory of the Cellulose Molecule..........12mo, 2 50
* Bruff's Text-book Ordnance and Gunnery..........8vo, 6 00
Chase's Screw Propellers and Marine Propulsion..........8vo, 3 00
Craig's Azimuth..........4to, 3 50
Crehore and Squire's Polarizing Photo-chronograph..........8vo, 3 00
Cronkhite's Gunnery for Non-commissioned Officers..........24mo, morocco, 2 00
* Davis's Elements of Law..........8vo, 2 50
* Treatise on the Military Law of United States..........8vo, 7 00
Sheep, 7 50
De Brack's Cavalry Outpost Duties. (Carr.)..........24mo morocco, 2 00
Dietz's Soldier's First Aid Handbook..........16mo, morocco, 1 25
* Dredge's Modern French Artillery..........4to, half morocco, 15 00
Durand's Resistance and Propulsion of Ships..........8vo, 5 00
* Dyer's Handbook of Light Artillery..........12mo, 3 00
Eissler's Modern High Explosives..........8vo, 4 00
* Fiebeger's Text-book on Field Fortification..........Small 8vo, 2 00
Hamilton's The Gunner's Catechism..........18mo, 1 00
* Hoff's Elementary Naval Tactics..........8vo, 1 50
Ingalls's Handbook of Problems in Direct Fire..........8vo, 4 00
* Ballistic Tables..........8vo, 1 50
* Lyons's Treatise on Electromagnetic Phenomena. Vols. I. and II..8vo. each, 6 00
* Mahan's Permanent Fortifications. (Mercur.)..........8vo, half morocco, 7 50
Manual for Courts-martial..........16mo, morocco, 1 50
* Mercur's Attack of Fortified Places..........12mo, 2 00
* Elements of the Art of War..........8vo, 4 00
Metcalf's Cost of Manufactures—And the Administration of Workshops, Public and Private..........8vo, 5 00
* Ordnance and Gunnery. 2 vols..........12mo, 5 00
Murray's Infantry Drill Regulations..........18mo, paper, 10
Peabody's Naval Architecture..........8vo, 7 50
* Phelps's Practical Marine Surveying..........8vo, 2 50
Powell's Army Officer's Examiner..........12mo, 4 00
Sharpe's Art of Subsisting Armies in War..........18mo, morocco, 1 50

* Walke's Lectures on Explosives...8vo 4 00
* Wheeler's Siege Operations and Military Mining..........................8vo, 2 00
Winthrop's Abridgment of Military Law.................................12mo, 2 50
Woodhull's Notes on Military Hygiene..................................16mo, 1 50
Young's Simple Elements of Navigation......................16mo morocco, 1 00
Second Edition, Enlarged and Revised.....................16mo, morocco, 2 00

ASSAYING.

Fletcher's Practical Instructions in Quantitative Assaying with the Blowpipe. 12mo, morocco, 1 50
Furman's Manual of Practical Assaying....................................8vo, 3 00
Miller's Manual of Assaying...12mo, 1 00
O'Driscoll's Notes on the Treatment of Gold Ores.........................8vo, 2 00
Ricketts and Miller's Notes on Assaying..................................8vo, 3 00
Ulke's Modern Electrolytic Copper Refining...............................8vo, 3 00
Wilson's Cyanide Processes..12mo, 1 50
Chlorination Process..12mo, 1 50

ASTRONOMY.

Comstock's Field Astronomy for Engineers.................................8vo, 2 50
Craig's Azimuth..4to, 3 50
Doolittle's Treatise on Practical Astronomy..............................8vo, 4 00
Gore's Elements of Geodesy...8vo, 2 50
Hayford's Text-book of Geodetic Astronomy................................8vo, 3 00
Merriman's Elements of Precise Surveying and Geodesy.....................8vo, 2 50
* Michie and Harlow's Practical Astronomy................................8vo, 3 00
* White's Elements of Theoretical and Descriptive Astronomy.............12mo, 2 00

BOTANY.

Davenport's Statistical Methods, with Special Reference to Biological Variation. 16mo, morocco, 1 25
Thomé and Bennett's Structural and Physiological Botany.................16mo, 2 25
Westermaier's Compendium of General Botany. (Schneider.)................8vo, 2 00

CHEMISTRY.

Adriance's Laboratory Calculations and Specific Gravity Tables..........12mo, 1 25
Allen's Tables for Iron Analysis...8vo, 3 00
Arnold's Compendium of Chemistry. (Mandel.)........................Small 8vo. 3 50
Austen's Notes for Chemical Students....................................12mo, 1 50
* Austen and Langworthy. The Occurrence of Aluminium in Vegetable Products, Animal Products, and Natural Waters....................8vo, 2 00
Bernadou's Smokeless Powder.—Nitro-cellulose, and Theory of the Cellulose Molecule..12mo, 2 50
Bolton's Quantitative Analysis...8vo, 1 50
* Browning's Introduction to the Rarer Elements...........................8vo, 1 50
Brush and Penfield's Manual of Determinative Mineralogy..................8vo, 4 00
Classen's Quantitative Chemical Analysis by Electrolysis. (Boltwood.)....8vo, 3 00
Cohn's Indicators and Test-papers.......................................12mo, 2 00
Tests and Reagents...8vo, 3 00
Copeland's Manual of Bacteriology. (*In preparation.*)
Craft's Short Course in Qualitative Chemical Analysis. (Schaeffer.)....12mo, 1 50
Dolezalek's Theory of the Lead Accumulator (Storage Battery). (Von Ende)...12mo. 2 50
Drechsel's Chemical Reactions. (Merrill.)...............................12mo, 1 25
Duhem's Thermodynamics and Chemistry. (Burgess.)........................8vo. 4 00
Eissler's Modern High Explosives...8vo, 4 00
Effront's Enzymes and their Applications. (Prescott.)....................8vo, 3 00
Erdmann's Introduction to Chemical Preparations. (Dunlap.)..............12mo, 1 25

Fletcher's Practical Instructions in Quantitative Assaying with the Blowpipe
12mo, morocco, 1 50
Fowler's Sewage Works Analyses..........12mo, 2 00
Fresenius's Manual of Qualitative Chemical Analysis. (Wells.)..........8vo, 5 00
Manual of Qualitative Chemical Analysis. Part I. Descriptive. (Wells.)
8vo, 3 00
System of Instruction in Quantitative Chemical Analysis. (Cohn.)
2 vols..........8vo, 12 50
Fuertes's Water and Public Health..........12mo, 1 50
Furman's Manual of Practical Assaying..........8vo, 3 00
*Getman's Exercises in Physical Chemistry..........12mo, 2 00
Gill's Gas and Fuel Analysis for Engineers..........12mo, 1 25
Grotenfelt's Principles of Modern Dairy Practice. (Woll.)..........12mo, 2 00
Hammarsten's Text-book of Physiological Chemistry. (Mandel.)..........8vo, 4 00
Helm's Principles of Mathematical Chemistry. (Morgan.)..........12mo, 1 50
Hering's Ready Reference Tables (Conversion Factors)..........16mo, morocco, 2 50
Hinds's Inorganic Chemistry..........8vo, 3 00
* Laboratory Manual for Students..........12mo, 75
Holleman's Text-book of Inorganic Chemistry. (Cooper.)..........8vo, 2 50
Text-book of Organic Chemistry. (Walker and Mott.)..........8vo, 2 50
* Laboratory Manual of Organic Chemistry. (Walker.)..........12mo, 1 00
Hopkins's Oil-chemists' Handbook..........8vo, 3 00
Jackson's Directions for Laboratory Work in Physiological Chemistry..8vo, 1 25
Keep's Cast Iron..........8vo, 2 50
Ladd's Manual of Quantitative Chemical Analysis..........12mo, 1 00
Landauer's Spectrum Analysis. (Tingle.)..........8vo, 3 00
Lassar-Cohn's Practical Urinary Analysis. (Lorenz.)..........12mo, 1 00
Leach's The Inspection and Analysis of Food with Special Reference to State Control. (*In preparation.*)
Löb's Electrolysis and Electrosynthesis of Organic Compounds. (Lorenz.) 12mo, 1 00
Mandel's Handbook for Bio-chemical Laboratory..........12mo, 1 50
* **Martin's** Laboratory Guide to Qualitative Analysis with the Blowpipe..12mo, 60
Mason's Water-supply. (Considered Principally from a Sanitary Standpoint.)
3d Edition, Rewritten..........8vo, 4 00
Examination of Water. (Chemical and Bacteriological.)..........12mo, 1 25
Meyer's Determination of Radicles in Carbon Compounds. (Tingle.)..12mo, 1 00
Miller's Manual of Assaying..........12mo, 1 00
Mixter's Elementary Text-book of Chemistry..........12mo, 1 50
Morgan's Outline of Theory of Solution and its Results..........12mo, 1 00
Elements of Physical Chemistry..........12mo, 2 00
Morse's Calculations used in Cane-sugar Factories..........16mo, morocco, 1 50
Mulliken's General Method for the Identification of Pure Organic Compounds.
Vol. I..........Large 8vo, 5 00
Nichols's Water-supply. (Considered mainly from a Chemical and Sanitary Standpoint, 1883.)..........8vo, 2 50
O'Brine's Laboratory Guide in Chemical Analysis..........8vo, 2 00
O'Driscoll's Notes on the Treatment of Gold Ores..........8vo, 2 00
Ost and Kolbeck's Text-book of Chemical Technology. (Lorenz—Bozart.)
(*In preparation.*)
Ostwald's School of Chemistry. Part One. (Ramsey.) (*In press.*)
* **Penfield's** Notes on Determinative Mineralogy and Record of Mineral Tests.
8vo, paper, 50
Pictet's The Alkaloids and their Chemical Constitution. (Biddle.)..........8vo, 5 00
Pinner's Introduction to Organic Chemistry. (Austen.)..........12mo, 1 50
Poole's Calorific Power of Fuels..........8vo, 3 00
Prescott and Winslow's Elements of Water Bacteriology, with Special Reference to Sanitary Water Analysis..........12mo, 1 25
* **Reisig's** Guide to Piece-dyeing..........8vo, 25 00

Richards and Woodman's Air, Water, and Food from a Sanitary Standpoint. 8vo, 2 00
Richards's Cost of Living as Modified by Sanitary Science.............12mo, 1 00
Cost of Food a Study in Dietaries.............................12mo, 1 00
* Richards and Williams's The Dietary Computer.....................8vo, 1 50
Ricketts and Russell's Skeleton Notes upon Inorganic Chemistry. (Part I.—
Non-metallic Elements.)........................ 8vo, morocco, 75
Ricketts and Miller's Notes on Assaying.............................8vo, 3 00
Rideal's Sewage and the Bacterial Purification of Sewage...............8vo, 3 50
Disinfection and the Preservation of Food.........................8vo, 4 00
Ruddiman's Incompatibilities in Prescriptions............................8vo, 2 00
Sabin's Industrial and Artistic Technology of Paints and Varnish. (*In press.*)
Salkowski's Physiological and Pathological Chemistry. (Orndorff.)....8vo, 2 50
Schimpf's Text-book of Volumetric Analysis.........................12mo, 2 50
Essentials of Volumetric Analysis..............................12mo, 1 25
Spencer's Handbook for Chemists of Beet-sugar Houses......16mo, morocco, 3 00
Handbook for Sugar Manufacturers and their Chemists..16mo, morocco, 2 00
Stockbridge's Rocks and Soils..8vo, 2 50
* Tillman's Elementary Lessons in Heat..............................8vo, 1 50
* Descriptive General Chemistry..............................8vo, 3 00
Treadwell's Qualitative Analysis. (Hall.).............................8vo, 3 00
Quantitative Analysis. (Hall.).....................................8vo, 4 00
Turneaure and Russell's Public Water-supplies.......................8vo, 5 00
Van Deventer's Physical Chemistry for Beginners. (Boltwood.).......12mo, 1 50
* Walke's Lectures on Explosives.......................................8vo, 4 00
Wassermann's Immune Sera: Hæmolysins, Cytotoxins, and Precipitins. (Bolduan.)...12mo, 1 00
Wells's Laboratory Guide in Qualitative Chemical Analysis.............8vo, 1 50
Short Course in Inorganic Qualitative Chemical Analysis for Engineering
Students...12mo, 1 50
Whipple's Microscopy of Drinking-water...............................8vo, 3 50
Wiechmann's Sugar Analysis..................................Small 8vo, 2 50
Wilson's Cyanide Processes..12mo, 1 50
Chlorination Process..12mo, 1 50
Wulling's Elementary Course in Inorganic Pharmaceutical and Medical Chemistry...12mo, 2 00

CIVIL ENGINEERING.

BRIDGES AND ROOFS. HYDRAULICS. MATERIALS OF ENGINEERING RAILWAY ENGINEERING.

Baker's Engineers' Surveying Instruments............................12mo, 3 00
Bixby's Graphical Computing Table..............Paper 19½×24¼ inches. 25
** Burr's Ancient and Modern Engineering and the Isthmian Canal. (Postage,
27 cents additional.).................................8vo, net 3 50
Comstock's Field Astronomy for Engineers............................8vo, 2 50
Davis's Elevation and Stadia Tables.....................................8vo, 1 00
Elliott's Engineering for Land Drainage.............................12mo, 1 50
Practical Farm Drainage.......................................12mo, 1 00
Folwell's Sewerage. (Designing and Maintenance.)..................8vo, 3 00
Freitag's Architectural Engineering. 2d Edition, Rewritten............8vo, 3 50
French and Ives's Stereotomy..8vo, 2 50
Goodhue's Municipal Improvements....................................12mo, 1 75
Goodrich's Economic Disposal of Towns' Refuse.......................8vo, 3 50
Gore's Elements of Geodesy...8vo, 2 50
Hayford's Text-book of Geodetic Astronomy..........................8vo, 3 00
Hering's Ready Reference Tables (Conversion Factors).......16mo, morocco, 2 50
Howe's Retaining Walls for Earth......................................12mo, 1 25
Johnson's Theory and Practice of Surveying.....................Small 8vo, 4 00
Statics by Algebraic and Graphic Methods..........................8vo, 2 00

Kiersted's Sewage Disposal..12mo, 1 25
Laplace's Philosophical Essay on Probabilities. (Truscott and Emory.) 12mo, 2 00
Mahan's Treatise on Civil Engineering. (1873.) (Wood.)............8vo, 5 00
* Descriptive Geometry..8vo, 1 50
Merriman's Elements of Precise Surveying and Geodesy...............8vo, 2 50
Elements of Sanitary Engineering...................................8vo, 2 00
Merriman and Brooks's Handbook for Surveyors..............16mo, morocco, 2 00
Nugent's Plane Surveying..8vo, 3 50
Ogden's *Sewer Design*...12mo, 2 00
Patton's Treatise on Civil Engineering...................8vo half leather, 7 50
Reed's Topographical Drawing and Sketching..............................4to, 5 00
Rideal's Sewage and the Bacterial Purification of Sewage...............8vo, 3 50
Siebert and Biggin's Modern Stone-cutting and Masonry.................8vo, 1 50
Smith's Manual of Topographical Drawing. (McMillan.)...................8vo, 2 50
Sondericker's Graphic Statics, with Applications to Trusses, Beams, and Arches...8vo, 2 00
* Trautwine's Civil Engineer's Pocket-book.................16mo, morocco, 5 00
Wait's Engineering and Architectural Jurisprudence.....................8vo, 6 00
Sheep, 6 50
Law of Operations Preliminary to Construction in Engineering and Architecture..8vo, 5 00
Sheep, 5 50
Law of Contracts..8vo, 3 00
Warren's Stereotomy—Problems in Stone-cutting..........................8vo, 2 50
Webb's Problems in the Use and Adjustment of Engineering Instruments.
16mo, morocco, 1 25
* Wheeler's Elementary Course of Civil Engineering.....................8vo, 4 00
Wilson's *Topographic Surveying*...8vo, 3 50

BRIDGES AND ROOFS.

Boller's Practical Treatise on the Construction of Iron Highway Bridges..8vo, 2 00
* *Thames River Bridge*....................................4to, paper, 5 00
Burr's Course on the Stresses in Bridges and Roof Trusses, Arched Ribs, and Suspension Bridges...8vo, 3 50
Du Bois's Mechanics of Engineering. Vol. II..................Small 4to, 10 00
Foster's Treatise on Wooden Trestle Bridges..............................4to, 5 00
Fowler's Coffer-dam Process for Piers....................................8vo, 2 50
Greene's Roof Trusses..8vo, 1 25
Bridge Trusses...8vo, 2 50
Arches in Wood, Iron, and Stone..8vo, 2 50
Howe's Treatise on Arches...8vo, 4 00
Design of *Simple Roof-trusses* in Wood and Steel.......................8vo, 2 00
Johnson, Bryan, and Turneaure's Theory and Practice in the Designing of Modern Framed Structures...................................Small 4to, 10 00
Merriman and Jacoby's Text-book on Roofs and Bridges:
Part I.—Stresses in Simple Trusses......................................8vo, 2 50
Part II.—Graphic Statics...8vo, 2 50
Part III.—Bridge Design. 4th Edition, Rewritten.........................8vo, 2 50
Part IV.—Higher Structures...8vo, 2 50
Morison's Memphis Bridge..4to, 10 00
Waddell's De Pontibus, a Pocket-book for Bridge Engineers...16mo, morocco, 3 00
Specifications for Steel Bridges...12mo, 1 25
Wood's Treatise on the Theory of the Construction of Bridges and Roofs.8vo, 2 00
Wright's Designing of Draw-spans:
Part I. —Plate-girder *Draws*...8vo, 2 50
Part II.—Riveted-truss and Pin-connected Long-span Draws.............8vo, 2 50
Two parts in one volume...8vo, 3 50

HYDRAULICS.

Bazin's Experiments upon the Contraction of the Liquid Vein Issuing from an Orifice. (Trautwine.) 8vo, 2 00
Bovey's Treatise on Hydraulics....................8vo, 5 00
Church's Mechanics of Engineering....................8vo, 6 00
Diagrams of Mean Velocity of Water in Open Channels..........paper, 1 50
Coffin's Graphical Solution of Hydraulic Problems..........16mo, morocco, 2 50
Flather's Dynamometers, and the Measurement of Power..........12mo, 3 00
Folwell's Water-supply Engineering....................8vo, 4 00
Frizell's Water-power....................8vo, 5 00
Fuertes's Water and Public Health....................12mo, 1 50
Water-filtration Works....................12mo, 2 50
Ganguillet and Kutter's General Formula for the Uniform Flow of Water in Rivers and Other Channels. (Hering and Trautwine.)........8vo, 4 00
Hazen's Filtration of Public Water-supply....................8vo, 3 00
Hazlehurst's Towers and Tanks for Water-works....................8vo, 2 50
Herschel's 115 Experiments on the Carrying Capacity of Large, Riveted, Metal Conduits....................8vo, 2 00
Mason's Water-supply. (Considered Principally from a Sanitary Standpoint.) 3d Edition, Rewritten 8vo, 4 00
Merriman's Treatise on Hydraulics. 9th Edition, Rewritten...........8vo, 5 00
* Michie's Elements of Analytical Mechanics....................8vo, 4 00
Schuyler's Reservoirs for Irrigation, Water-power, and Domestic Water-supply....................Large 8vo, 5 00
** Thomas and Watt's Improvement of Rivers. (Post., 44 c. additional), 4to, 6 00
Turneaure and Russell's Public Water-supplies....................8vo, 5 00
Wegmann's Design and Construction of Dams....................4to, 5 00
Water-supply of the City of New York from 1658 to 1895..........4to, 10 00
Weisbach's Hydraulics and Hydraulic Motors. (Du Bois.)..........8vo, 5 00
Wilson's Manual of Irrigation Engineering..........Small 8vo, 4 00
Wolff's Windmill as a Prime Mover....................8vo, 3 00
Wood's Turbines....................8vo, 2 50
Elements of Analytical Mechanics....................8vo, 3 00

MATERIALS OF ENGINEERING.

Baker's Treatise on Masonry Construction....................8vo, 5 00
Roads and Pavements....................8vo, 5 00
Black's United States Public Works..........Oblong 4to, 5 00
Bovey's Strength of Materials and Theory of Structures..........8vo, 7 50
Burr's Elasticity and Resistance of the Materials of Engineering. 6th Edition, Rewritten....................8vo, 7 50
Byrne's Highway Construction....................8vo, 5 00
Inspection of the Materials and Workmanship Employed in Construction. 16mo, 3 00
Church's Mechanics of Engineering....................8vo, 6 00
Du Bois's Mechanics of Engineering. Vol. I..........Small 4to, 7 50
Johnson's Materials of Construction..........Large 8vo, 6 00
Keep's Cast Iron....................8vo, 2 50
Lanza's Applied Mechanics....................8vo, 7 50
Martens's Handbook on Testing Materials. (Henning.) 2 vols.........8vo, 7 50
Merrill's Stones for Building and Decoration....................8vo, 5 00
Merriman's Text-book on the Mechanics of Materials..........8vo, 4 00
Strength of Materials....................12mo, 1 00
Metcalf's Steel. A Manual for Steel-users....................12mo, 2 00
Patton's Practical Treatise on Foundations....................8vo, 5 00

Rockwell's Roads and Pavements in France........................12mo, 1 25
Smith's Materials of Machines....................................12mo, 1 00
Snow's Principal Species of Wood.................................8vo, 3 50
Spalding's Hydraulic Cement......... ....12mo, 2 00
Text-book on Roads and Pavements..........................12mo, 2 00
Thurston's Materials of Engineering. 3 Parts...................... 8vo, 8 00
art I.—Non-metallic Materials of Engineering and Metallurgy.....8vo, 2 00
Part II.—Iron and Steel.....................................8vo, 3 50
Part III.—A Treatise on Brasses, Bronzes, and Other Alloys and their Constituents.. 8vo, 2 50
Thurston's Text-book of the Materials of Construction 8vo, 5 00
Tillson's Street Pavements and Paving Materials......................8vo, 4 00
Waddell's De Pontibus. (A Pocket-book for Bridge Engineers.)..16mo, mor., 3 00
Specifications for Steel Bridges..............................12mo, 1 25
Wood's Treatise on the Resistance of Materials, and an Appendix on the Preservation of Timber..................................8vo, 2 00
Elements of Analytical Mechanics.............................8vo, 3 00
Wood's Rustless Coatings: Corrosion and Electrolysis of Iron and Steel...8vo, 4 00

RAILWAY ENGINEERING.

Andrews's Handbook for Street Railway Engineers. 3X5 inches. morocco, 1 25
Berg's Buildings and Structures of American Railroads..................4to, 5 00
Brooks's Handbook of Street Railroad Location............16mo, morocco, 1 50
Butts's Civil Engineer's Field-book......................16mo, morocco, 2 50
Crandall's Transition Curve.............................16mo, morocco, 1 50
Railway and Other Earthwork Tables.........................8vo, 1 50
Dawson's "Engineering" and Electric Traction Pocket-book. 16mo, morocco, 5 00
Dredge's History of the Pennsylvania Railroad: (1879)............Paper, 5 00
* Drinker's Tunneling, Explosive Compounds, and Rock Drills, 4to, half mor., 25 00
Fisher's Table of Cubic Yards.................................Cardboard, 25
Godwin's Railroad Engineers' Field-book and Explorers' Guide.....16mo, mor., 2 50
Howard's Transition Curve Field-book....................16mo, morocco. 1 50
Hudson's Tables for Calculating the Cubic Contents of Excavations and Embankments 8vo, 1 00
Molitor and Beard's Manual for Resident Engineers.................16mo, 1 00
Nagle's Field Manual for Railroad Engineers..............16mo morocco. 3 00
Philbrick's Field Manual for Engineers...................16mo, morocco, 3 00
Searles's Field Engineering.............................16mo, morocco, 3 00
Railroad Spiral..................................16mo, morocco, 1 50
Taylor's Prismoidal Formulæ and Earthwork..........................8vo, 1 50
* Trautwine's Method of Calculating the Cubic Contents of Excavations and Embankments by the Aid of Diagrams.......................8vo, 2 00
The Field Practice of Laying Out Circular Curves for Railroads. 12mo, morocco, 2 50
Cross-section Sheet...Paper, 25
Webb's Railroad Construction. 2d Edition, Rewritten......16mo. morocco, 5 00
Wellington's Economic Theory of the Location of Railways......Small 8vo, 5 00

DRAWING.

Barr's Kinematics of Machinery......................................8vo, 2 50
* Bartlett's Mechanical Drawing. 8vo, 3 00
* " " " Abridged Ed...............................8vo, 1 50
Coolidge's Manual of Drawing............................ 8vo, paper, 1 00
Coolidge and Freeman's Elements of General Drafting for Mechanical Engineers. (*In press.*)
Durley's Kinematics of Machines....................................8vo, 4 00

Hill's Text-book on Shades and Shadows, and Perspective..............8vo, 2 00
Jamison's Elements of Mechanical Drawing. (*In press.*)
Jones's Machine Design:
Part I.—Kinematics of Machinery..............................8vo, 1 50
Part II.—Form, Strength, and Proportions of Parts................8vo, 3 00
MacCord's Elements of Descriptive Geometry......................8vo, 3 00
Kinematics; or, Practical Mechanism..............................8vo, 5 00
Mechanical Drawing..4to, 4 00
Velocity Diagrams...8vo, 1 50
* Mahan's Descriptive Geometry and Stone-cutting..................8vo, 1 50
Industrial Drawing. (Thompson.).................................8vo, 3 50
Reed's Topographical Drawing and Sketching.......................4to, 5 00
Reid's Course in Mechanical Drawing..............................8vo, 2 00
Text-book of Mechanical Drawing and Elementary Machine Design..8vo, 3 00
Robinson's Principles of Mechanism...............................8vo, 3 00
Smith's Manual of Topographical Drawing. (McMillan.)..............8vo, 2 50
Warren's Elements of Plane and Solid Free-hand Geometrical Drawing..12mo, 1 00
Drafting Instruments and Operations.............................12mo, 1 25
Manual of Elementary Projection Drawing.........................12mo, 1 50
Manual of Elementary Problems in the Linear Perspective of Form and Shadow...12mo, 1 00
Plane Problems in Elementary Geometry...........................12mo, 1 25
Primary Geometry..12mo, 75
Elements of Descriptive Geometry, Shadows, and Perspective.......8vo, 3 50
General Problems of Shades and Shadows..........................8vo, 3 00
Elements of Machine Construction and Drawing.....................8vo, 7 50
Problems, Theorems, and Examples in Descriptive Geometry.........8vo, 2 50
Weisbach's Kinematics and the Power of Transmission. (Hermann and Klein.)..8vo, 5 00
Whelpley's Practical Instruction in the Art of Letter Engraving.........12mo, 2 00
Wilson's Topographic Surveying....................................8vo, 3 50
Free-hand Perspective...8vo, 2 50
Free-hand Lettering...8vo, 1 00
Woolf's Elementary Course in Descriptive Geometry.............Large 8vo, 3 00

ELECTRICITY AND PHYSICS.

Anthony and Brackett's Text-book of Physics. (Magie.)........Small 8vo, 3 00
Anthony's Lecture-notes on the Theory of Electrical Measurements.....12mo, 1 00
Benjamin's History of Electricity.................................8vo, 3 00
Voltaic Cell..8vo, 3 00
Classen's Quantitative Chemical Analysis by Electrolysis. (Boltwood.)..8vo, 3 00
Crehore and Squier's Polarizing Photo-chronograph..................8vo, 3 00
Dawson's "Engineering" and Electric Traction Pocket-book..16mo, morocco, 5 00
Dolezalek's Theory of the Lead Accumulator (Storage Battery). (Von Ende.)...12mo, 2 50
Duhem's Thermodynamics and Chemistry. (Burgess.)...................8vo, 4 00
Flather's Dynamometers, and the Measurement of Power.............12mo, 3 00
Gilbert's De Magnete. (Mottelay.).................................8vo, 2 50
Hanchett's Alternating Currents Explained........................12mo, 1 00
Hering's Ready Reference Tables (Conversion Factors)......16mo, morocco, 2 50
Holman's Precision of Measurements................................8vo, 2 00
Telescopic Mirror-scale Method, Adjustments, and Tests.....Large 8vo, 75
Landauer's Spectrum Analysis. (Tingle.)...........................8vo, 3 00
Le Chatelier's High-temperature Measurements. (Boudouard—Burgess.)12mo, 3 00
Löb's Electrolysis and Electrosynthesis of Organic Compounds. (Lorenz.) 12mo, 1 00
* Lyons's Treatise on Electromagnetic Phenomena. Vols. I. and II. 8vo, each, 6 00
* Michie. Elements of Wave Motion Relating to Sound and Light......8vo, 4 00

Niaudet's Elementary Treatise on Electric Batteries. (Fishback.)......12mo, 2 50
* Rosenberg's Electrical Engineering. (Haldane Gee—Kinzbrunner.)....8vo, 1 50
Ryan, Norris, and Hoxie's Electrical Machinery. Vol. I...............8vo, 2 50
Thurston's Stationary Steam-engines...............................8vo, 2 50
* Tillman's Elementary Lessons in Heat..............................8vo, 1 50
Tory and Pitcher's Manual of Laboratory Physics.............. Small 8vo, 2 00
Ulke's Modern Electrolytic Copper Refining.........................8vo, 3 00

LAW.

* Davis's Elements of Law..8vo, 2 50
* Treatise on the Military Law of United States....................8vo, 7 00
* Sheep, 7 50
Manual for Courts-martial.............................16mo, morocco, 1 50
Wait's Engineering and Architectural Jurisprudence....................8vo, 6 00
Sheep, 6 50
Law of Operations Preliminary to Construction in Engineering and Architecture.. 8vo, 5 00
Sheep, 5 50
Law of Contracts..8vo, 3 00
Winthrop's Abridgment of Military Law..............................12mo, 2 50

MANUFACTURES.

Bernadou's Smokeless Powder—Nitro-cellulose and Theory of the Cellulose Molecule..12mo, 2 50
Bolland's Iron Founder..12mo, 2 50
"The Iron Founder," Supplement.................................12mo, 2 50
Encyclopedia of Founding and Dictionary of Foundry Terms Used in the Practice of Moulding...................................12mo, 3 00
Eissler's Modern High Explosives....................................8vo, 4 00
Effront's Enzymes and their Applications. (Prescott.)................8vo, 3 00
Fitzgerald's Boston Machinist..18mo, 1 00
Ford's Boiler Making for Boiler Makers..............................18mo, 1 00
Hopkins's Oil-chemists' Handbook....................................8vo, 3 00
Keep's Cast Iron..8vo, 2 50
Leach's The Inspection and Analysis of Food with Special Reference to State Control. (*In preparation.*)
Metcalf's Steel. A Manual for Steel-users...........................12mo, 2 00
Metcalfe's Cost of Manufactures—And the Administration of Workshops, Public and Private..8vo, 5 00
Meyer's Modern Locomotive Construction.............................4to, 10 00
Morse's Calculations used in Cane-sugar Factories..........16mo, morocco, 1 50
* Reisig's Guide to Piece-dyeing....................................8vo, 25 00
Smith's Press-working of Metals.....................................8vo, 3 00
Spalding's Hydraulic Cement..12mo, 2 00
Spencer's Handbook for Chemists of Beet-sugar Houses.....16mo, morocco, 3 00
Handbook for Sugar Manufacturers and their Chemists...16mo, morocco, 2 00
Thurston's Manual of Steam-boilers, their Designs, Construction and Operation...8vo, 5 00
* Walke's Lectures on Explosives....................................8vo, 4 00
West's American Foundry Practice...................................12mo, 2 50
Moulder's Text-book..12mo, 2 50
Wiechmann's Sugar Analysis..................................Small 8vo, 2 50
Wolff's Windmill as a Prime Mover...................................8vo, 3 00
Woodbury's Fire Protection of Mills.................................8vo, 2 50
Wood's Rustless Coatings: Corrosion and Electrolysis of Iron and Steel...8vo, 4 00

MATHEMATICS.

Baker's Elliptic Functions	8vo,	1 50
* Bass's Elements of Differential Calculus	12mo,	4 00
Briggs's Elements of Plane Analytic Geometry	12mo,	1 00
Compton's Manual of Logarithmic Computations	12mo,	1 50
Davis's Introduction to the Logic of Algebra	8vo,	1 50
* Dickson's College Algebra	Large 12mo,	1 50
* Answers to Dickson's College Algebra	8vo, paper,	25
* Introduction to the Theory of Algebraic Equations	Large 12mo,	1 25
Halsted's Elements of Geometry	8vo,	1 75
Elementary Synthetic Geometry	8vo,	1 50
Rational Geometry	12mo,	1 75
* Johnson's Three-place Logarithmic Tables: Vest-pocket size	paper,	15
	100 copies for	5 00
* Mounted on heavy cardboard, 8 × 10 inches,		25
	10 copies for	2 00
Elementary Treatise on the Integral Calculus	Small 8vo,	1 50
Curve Tracing in Cartesian Co-ordinates	12mo,	1 00
Treatise on Ordinary and Partial Differential Equations	Small 8vo,	3 50
Theory of Errors and the Method of Least Squares	12mo,	1 50
* Theoretical Mechanics	12mo,	3 00
Laplace's Philosophical Essay on Probabilities. (Truscott and Emory.)	12mo,	2 00
* Ludlow and Bass. Elements of Trigonometry and Logarithmic and Other Tables	8vo,	3 00
Trigonometry and Tables published separately	Each,	2 00
* Ludlow's Logarithmic and Trigonometric Tables	8vo,	1 00
Maurer's Technical Mechanics	8vo,	4 00
Merriman and Woodward's Higher Mathematics	8vo,	5 00
Merriman's Method of Least Squares	8vo,	2 00
Rice and Johnson's Elementary Treatise on the Differential Calculus	Sm., 8vo,	3 00
Differential and Integral Calculus. 2 vols. in one	Small 8vo,	2 50
Sabin's Industrial and Artistic Technology of Paints and Varnish. (*In press.*)		
Wood's Elements of Co-ordinate Geometry	8vo,	2 00
Trigonometry: Analytical, Plane, and Spherical	12mo,	1 00

MECHANICAL ENGINEERING.

MATERIALS OF ENGINEERING, STEAM-ENGINES AND BOILERS.

Baldwin's Steam Heating for Buildings	12mo,	2 50
Barr's Kinematics of Machinery	8vo,	2 50
* Bartlett's Mechanical Drawing	8vo,	3 00
* " " " Abridged Ed.	8vo,	1 50
Benjamin's Wrinkles and Recipes	12mo,	2 00
Carpenter's Experimental Engineering	8vo,	6 00
Heating and Ventilating Buildings	8vo,	4 00
Cary's Smoke Suppression in Plants using Bituminous Coal. (*In preparation.*)		
Clerk's Gas and Oil Engine	Small 8vo,	4 00
Coolidge's Manual of Drawing	8vo, paper,	1 00
Coolidge and Freeman's Elements of General Drafting for Mechanical Engineers. (*In press.*)		
Cromwell's Treatise on Toothed Gearing	12mo,	1 50
Treatise on Belts and Pulleys	12mo,	1 50
Durley's Kinematics of Machines	8vo,	4 00
Flather's Dynamometers and the Measurement of Power	12mo,	3 00
Rope Driving	12mo,	2 00

Gill's Gas and Fuel Analysis for Engineers............................12mo, 1 25
Hall's Car Lubrication..12mo, 1 00
Hering's Ready Reference Tables (Conversion Factors)......16mo, morocco, 2 50
Hutton's The Gas Engine...8vo, 5 00
Jones's Machine Design:
  Part I.—Kinematics of Machinery...................................8vo, 1 50
  Part II.—Form, Strength, and Proportions of Parts.................8vo, 3 00
Kent's Mechanical Engineer's Pocket-book................ 16mo, morocco, 5 00
Kerr's Power and Power Transmission.....................................8vo, 2 00
MacCord's Kinematics; or, Practical Mechanism...........................8vo, 5 00
  Mechanical Drawing..4to, 4 00
  Velocity Diagrams...8vo, 1 50
Mahan's Industrial Drawing. (Thompson.)................................8vo, 3 50
Poole's Calorific Power of Fuels..8vo, 3 00
Reid's Course in Mechanical Drawing.....................................8vo. 2 00
  Text-book of Mechanical Drawing and Elementary Machine Design..8vo, 3 00
Richards's Compressed Air..12mo, 1 50
Robinson's Principles of Mechanism......................................8vo, 3 00
Smith's Press-working of Metals...8vo, 3 00
Thurston's Treatise on Friction and Lost Work in Machinery and Mill Work..8vo, 3 00
  Animal as a Machine and Prime Motor, and the Laws of Energetics.12mo, 1 00
Warren's Elements of Machine Construction and Drawing..................8vo, 7 50
Weisbach's Kinematics and the Power of Transmission. Herrmann—Klein.)..8vo, 5 00
  Machinery of Transmission and Governors. (Herrmann—Klein.)..8vo, 5 00
  Hydraulics and Hydraulic Motors. (Du Bois.)...........................8vo, 5 00
Wolff's Windmill as a Prime Mover.......................................8vo, 3 00
Wood's Turbines...8vo, 2 50

MATERIALS OF ENGINEERING.

Bovey's Strength of Materials and Theory of Structures.................8vo, 7 50
Burr's Elasticity and Resistance of the Materials of Engineering. 6th Edition, Reset..8vo, 7 50
Church's Mechanics of Engineering.......................................8vo, 6 00
Johnson's Materials of Construction..............................Large 8vo, 6 00
Keep's Cast Iron..8vo, 2 50
Lanza's Applied Mechanics...8vo, 7 50
Martens's Handbook on Testing Materials. (Henning.)....................8vo, 7 50
Merriman's Text-book on the Mechanics of Materials.....................8vo, 4 00
  Strength of Materials..12mo, 1 00
Metcalf's Steel. A Manual for Steel-users..............................12mo. 2 00
Smith's Materials of Machines..12mo, 1 00
Thurston's Materials of Engineering........................3 vols., 8vo, 8 00
  Part II.—Iron and Steel...8vo, 3 50
  Part III.—A Treatise on Brasses, Bronzes, and Other Alloys and their Constituents...8vo 2 50
  Text-book of the Materials of Construction............................8vo, 5 00
Wood's Treatise on the Resistance of Materials and an Appendix on the Preservation of Timber..8vo, 2 00
  Elements of Analytical Mechanics......................................8vo, 3 00
Wood's Rustless Coatings: Corrosion and Electrolysis of Iron and Steel...8vo, 4 00

STEAM-ENGINES AND BOILERS.

Carnot's Reflections on the Motive Power of Heat. (Thurston.).......12mo, 1 50
Dawson's "Engineering" and Electric Traction Pocket-book..16mo, mor., 5 00
Ford's Boiler Making for Boiler Makers..................................18mo, 1 00

Goss's Locomotive Sparks..8vo, 2 00
Hemenway's Indicator Practice and Steam-engine Economy..........12mo, 2 00
Hutton's Mechanical Engineering of Power Plants....................8vo, 5 00
Heat and Heat-engines..8vo, 5 00
Kent's Steam-boiler Economy..8vo, 4 00
Kneass's Practice and Theory of the Injector..........................8vo 1 50
MacCord's Slide-valves..8vo, 2 00
Meyer's Modern Locomotive Construction.............................4to, 10 00
Peabody's Manual of the Steam-engine Indicator....................12mo, 1 50
Tables of the Properties of Saturated Steam and Other Vapors......8vo, 1 00
Thermodynamics of the Steam-engine and Other Heat-engines.....8vo, 5 00
Valve-gears for Steam-engines..................................8vo, 2 50
Peabody and Miller's Steam-boilers...................................8vo, 4 00
Pray's Twenty Years with the Indicator.......................Large 8vo, 2 50
Pupin's Thermodynamics of Reversible Cycles in Gases and Saturated Vapors. (Osterberg.)..12mo, 1 25
Reagan's Locomotives: Simple, Compound, and Electric.............12mo, 2 50
Rontgen's Principles of Thermodynamics. (Du Bois.)..................8vo, 5 00
Sinclair's Locomotive Engine Running and Management...............12mo, 2 00
Smart's Handbook of Engineering Laboratory Practice................12mo, 2 50
Snow's Steam-boiler Practice..8vo, 3 00
Spangler's Valve-gears..8vo, 2 50
Notes on Thermodynamics..12mo, 1 00
Spangler, Greene, and Marshall's Elements of Steam-engineering........8vo, 3 00
Thurston's Handy Tables..8vo, 1 50
Manual of the Steam-engine........................2 vols., 8vo, 10 00
Part I.—History, Structuce, and Theory..........................8vo, 6 00
Part II.—Design, Construction, and Operation......................8vo, 6 00
Handbook of Engine and Boiler Trials, and the Use of the Indicator and the Prony Brake..8vo 5 00
Stationary Steam-engines..8vo, 2 50
Steam-boiler Explosions in Theory and in Practice..................12mo 1 50
Manual of Steam-boilers, Their Designs, Construction, and Operation.8vo, 5 00
Weisbach's Heat, Steam, and Steam-engines. (Du Bois.)................8vo, 5 00
Whitham's Steam-engine Design..8vo, 5 00
Wilson's Treatise on Steam-boilers. (Flather.).........................16mo, 2 50
Wood's Thermodynamics Heat Motors, and Refrigerating Machines....8vo, 4 00

MECHANICS AND MACHINERY.

Barr's *Kinematics of Machinery*..8vo, 2 50
Bovey's Strength of Materials and Theory of Structures..................8vo, 7 50
Chase's The Art of Pattern-making....................................12mo, 2 50
Chordal.—Extracts from Letters..12mo, 2 00
Church's Mechanics of Engineering....................................8vo, 6 00
Notes and Examples in Mechanics......................................8vo, 2 00
Compton's First Lessons in Metal-working.............................12mo, 1 50
Compton and De Groodt's The Speed Lathe.............................12mo, 1 50
Cromwell's Treatise on Toothed Gearing...............................12mo, 1 50
Treatise on Belts and Pulleys..12mo, 1 50
Dana's *Text-book of Elementary Mechanics for the Use of Colleges and* Schools..12mo, 1 50
Dingey's Machinery Pattern Making....................................12mo, 2 00
Dredge's Record of the Transportation Exhibits Building of the World's Columbian Exposition of 1893.................4to, half morocco, 5 00

Du Bois's Elementary Principles of Mechanics:
Vol. I.—Kinematics..8vo, 3 50
Vol. II.—Statics..8vo, 4 00
Vol. III.—Kinetics..8vo, 3 50
Mechanics of Engineering. Vol. I......................Small 4to, 7 50
Vol. II......................Small 4to, 10 00
Durley's Kinematics of Machines 8vo, 4 00
Fitzgerald's Boston Machinist..16mo, 1 00
Flather's Dynamometers, and the Measurement of Power.............12mo, 3 00
Rope Driving..12mo, 2 00
Goss's Locomotive Sparks..8vo, 2 00
Hall's Car Lubrication..12mo, 1 00
Holly's Art of Saw Filing..18mo, 75
* Johnson's Theoretical Mechanics..12mo, 3 00
Statics by Graphic and Algebraic Methods........................8vo, 2 00
Jones's Machine Design:
Part I.—Kinematics of Machinery............................8vo, 1 50
Part II.—Form, Strength, and Proportions of Parts................8vo, 3 00
Kerr's Power and Power Transmission............................8vo, 2 00
Lanza's Applied Mechanics..8vo, 7 50
MacCord's Kinematics; or, Practical Mechanism....................8vo, 5 00
Velocity Diagrams..8vo, 1 50
Maurer's Technical Mechanics..8vo, 4 00
Merriman's Text-book on the Mechanics of Materials.................8vo, 4 00
* Michie's Elements of Analytical Mechanics........................8vo, 4 00
Reagan's Locomotives: Simple, Compound, and Electric..............12mo, 2 50
Reid's Course in Mechanical Drawing............................8vo, 2 00
Text-book of Mechanical Drawing and Elementary Machine Design..8vo, 3 00
Richards's Compressed Air..12mo, 1 50
Robinson's Principles of Mechanism............................8vo, 3 00
Ryan, Norris, and Hoxie's Electrical Machinery. Vol. I................8vo, 2 50
Sinclair's Locomotive-engine Running and Management..............12mo, 2 00
Smith's Press-working of Metals..8vo, 3 00
Materials of Machines..12mo, 1 00
Spangler, Greene, and Marshall's Elements of Steam-engineering.......8vo, 3 00
Thurston's Treatise on Friction and Lost Work in Machinery and Mill Work..8vo, 3 00
Animal as a Machine and Prime Motor, and the Laws of Energetics.12mo, 1 00
Warren's Elements of Machine Construction and Drawing.............8vo, 7 50
Weisbach's Kinematics and the Power of Transmission. (Herrmann—Klein.)..8vo, 5 00
Machinery of Transmission and Governors. (Herrmann—Klein.).8vo, 5 00
Wood's Elements of Analytical Mechanics............................8vo, 3 00
Principles of Elementary Mechanics............................12mo, 1 25
Turbines..8vo, 2 50
The World's Columbian Exposition of 1893............................4to, 1 00

METALLURGY.

Egleston's Metallurgy of Silver, Gold, and Mercury:
Vol. I.—Silver..8vo, 7 50
Vol. II.—Gold and Mercury..8vo, 7 50
** Iles's Lead-smelting. (Postage 9 cents additional.).............12mo, 2 50
Keep's Cast Iron..8vo, 2 50
Kunhardt's Practice of Ore Dressing in Europe........................8vo, 1 50
Le Chatelier's High-temperature Measurements. (Boudouard—Burgess.).12mo, 3 00
Metcalf's Steel. A Manual for Steel-users............................12mo, 2 00
Smith's Materials of Machines..12mo, 1 00

Thurston's Materials of Engineering. In Three Parts................8vo, 8 00
Part II.—Iron and Steel....................................8vo, 3 50
Part III.—A Treatise on Brasses, Bronzes, and Other Alloys and their Constituents...8vo, 2 50
Ulke's Modern Electrolytic Copper Refining.........................8vo, 3 00

MINERALOGY.

Barringer's Description of Minerals of Commercial Value. Oblong, morocco, 2 50
Boyd's Resources of Southwest Virginia............................8vo, 3 00
Map of Southwest Virginia.........................Pocket-book form, 2 00
Brush's Manual of Determinative Mineralogy. (Penfield.)............8vo, 4 00
Chester's Catalogue of Minerals............................8vo, paper, 1 00
Cloth, 1 25
Dictionary of the Names of Minerals...........................8vo, 3 50
Dana's System of Mineralogy..................... Large 8vo, half leather, 12 50
First Appendix to Dana's New "System of Mineralogy."....Large 8vo, 1 00
Text-book of Mineralogy.......................................8vo, 4 00
Minerals and How to Study Them..............................12mo, 1 50
Catalogue of American Localities of Minerals..............Large 8vo, 1 00
Manual of Mineralogy and Petrography.........................12mo, 2 00
Eakle's Mineral Tables...8vo, 1 25
Egleston's Catalogue of Minerals and Synonyms......................8vo, 2 50
Hussak's The Determination of Rock-forming Minerals. (Smith.) Small 8vo, 2 00
Merrill's Non-metallic Minerals: Their Occurrence and Uses............8vo, 4 00
* Penfield's Notes on Determinative Mineralogy and Record of Mineral Tests.
8vo, paper, 0 50
Rosenbusch's Microscopical Physiography of the Rock-making Minerals. (Iddings.)..8vo, 5 00
* Tillman's Text-book of Important Minerals and Docks...............8vo, 2 00
Williams's Manual of Lithology....................................8vo, 3 00

MINING.

Beard's Ventilation of Mines......................................12mo, 2 50
Boyd's Resources of Southwest Virginia.............................8vo, 3 00
Map of Southwest Virginia.........................Pocket-book form, 2 00
* Drinker's Tunneling, Explosive Compounds, and Rock Drills.
4to, half morocco, 25 00
Eissler's Modern High Explosives...................................8vo, 4 00
Fowler's Sewage Works Analyses....................................12mo, 2 00
Goodyear's Coal-mines of the Western Coast of the United States......12mo, 2 50
Ihlseng's Manual of Mining..8vo, 4 00
** Iles's Lead-smelting. (Postage 9c. additional.)..................12mo, 2 50
Kunhardt's Practice of Ore Dressing in Europe.......................8vo, 1 50
O'Driscoll's Notes on the Treatment of Gold Ores.....................8vo, 2 00
* Walke's Lectures on Explosives....................................8vo, 4 00
Wilson's Cyanide Processes...12mo, 1 50
Chlorination Process..12mo, 1 50
Hydraulic and Placer Mining....................................12mo, 2 00
Treatise on Practical and Theoretical Mine Ventilation...........12mo 1 25

SANITARY SCIENCE.

Copeland's Manual of Bacteriology. (*In preparation.*)
Folwell's Sewerage. (Designing, Construction and Maintenance.)......8vo, 3 00
Water-supply Engineering..8vo, 4 00
Fuertes's Water and Public Health..................................12mo, 1 50
Water-filtration Works..12mo, 2 50

Gerhard's Guide to Sanitary House-inspection........................16mo, 1 00
Goodrich's Economical Disposal of Town's Refuse..............Demy 8vo, 3 50
Hazen's Filtration of Public Water-supplies..........................8vo, 3 00
Kiersted's Sewage Disposal 12mo, 1 25
Leach's The Inspection and Analysis of Food with Special Reference to State Control. (*In preparation.*)
Mason's Water-supply. (Considered Principally from a Sanitary Standpoint.) 3d Edition, Rewritten..........................8vo, 4 00
Examination of Water. (Chemical and Bacteriological.)........12mo, 1 25
Merriman's Elements of Sanitary Engineering 8vo, 2 00
Nichols's Water-supply. (Considered Mainly from a Chemical and Sanitary Standpoint.) (1883.)..................................8vo, 2 50
Ogden's Sewer Design...12mo, 2 00
Prescott and Winslow's Elements of Water Bacteriology, with Special Reference to Sanitary Water Analysis...............................12mo, 1 25
* Price's Handbook on Sanitation.....................................12mo, 1 50
Richards'. Cost of Food. A Study in Dietaries.......................12mo, 1 00
Cost of Living as Modified by Sanitary Science 12mo, 1 00
Richards and Woodman's Air, Water, and Food from a Sanitary Standpoint..8vo, 2 00
* Richards and Williams's The Dietary Computer.......................8vo, 1 50
Rideal's Sewage and Bacterial Purification of Sewage..................8vo, 3 50
Turneaure and Russell's Public Water-supplies.........................8vo, 5 00
Whipple's Microscopy of Drinking-water................................8vo, 3 50
Woodhull's Notes and Military Hygiene..............................16mo, 1 50

MISCELLANEOUS.

Barker's Deep-sea Soundings..8vo, 2 00
Emmons's Geological Guide-book of the Rocky Mountain Excursion of the International Congress of Geologists..................Large 8vo 1 50
Ferrel's Popular Treatise on the Winds................................8vo 4 00
Haines's American Railway Management................................12mo, 2 50
Mott's Composition, Digestibility. and Nutritive Value of Food. Mounted chart. 1 25
Fallacy of the Present Theory of Sound.........................16mo 1 00
Ricketts's History of Rensselaer Polytechnic Institute, 1824–1894. Small 8vo, 3 00
Rotherham's Emphasized New Testament......................Large 8vo, 2 00
Steel's Treatise on the Diseases of the Dog...........................8vo, 3 50
Totten's Important Question in Metrology.............................8vo 2 50
The World's Columbian Exposition of 1893..............................4to, 1 00
Worcester and Atkinson. Small Hospitals, Establishment and Maintenance, and Suggestions for Hospital Architecture, with Plans for a Small Hospital..12mo, 1 25

HEBREW AND CHALDEE TEXT-BOOKS.

Green's Grammar of the Hebrew Language...............................8vo, 3 00
Elementary Hebrew Grammar.......................................12mo, 1 25
Hebrew Chrestomathy...8vo, 2 00
Gesenius's Hebrew and Chaldee Lexicon to the Old Testament Scriptures. (Tregelles.).........................Small 4to, half morocco, 5 00
Letteris's Hebrew Bible..8vo, 2 25